KNX
Product documentation

GIRA

Issue:
23.10.2026

Pushbutton sensor 4.55 Komfort

Art. no. 5045 00, 5046 00, 5047 00

Product image non-binding

Table of contents

1 Information on the product ... 4
1.1 Product catalogue ... 4
1.2 Purpose ... 4
1.3 Device components ... 6
1.4 As-delivered state ... 8
1.5 Technical data ... 8
1.6 Accessories ... 9
2 Safety instructions ... 10
3 Mounting and electrical connection ... 11
4 Commissioning ... 14
4.1 Safe-state mode ... 15
4.2 Master reset ... 16
5 Mounting the rockers ... 17
6 Dismantling ... 19
7 Exchanging the labelling field ... 20
8 Operation ... 21
9 Application programs ... 25
10 Notes on the software ... 27
10.1 Device generations and using the application programs ... 27
11 Scope of functions ... 28
12 General settings ... 31
12.1 Installation position ... 31
12.2 Basic settings ... 32
13 Channel-oriented device functions ... 36
13.1 Switching ... 37
13.2 Dimming and colour temperature ... 38
13.2.1 Brightness ... 39
13.2.2 Colour temperature ... 39
13.2.3 Brightness and colour temperature ... 40
13.3 Colour control and brightness ... 46
13.3.1 Colour sequence ... 48
13.3.2 Brightness adjustment ... 50
13.4 Shading ... 62
13.5 Value transmitter ... 67

13.5.1 1-byte value transmitter ... 68
13.5.2 2-byte value transmitter ... 68
13.5.3 3-byte value transmitter ... 69
13.5.4 6-byte value transmitter ... 69
13.6 Scene extension ... 79
13.7 2-channel operation ... 89
13.8 Controller extension ... 104
13.8.1 Operating mode switchover ... 104
13.8.2 Presence function ... 105
13.8.3 Setpoint shift ... 106
13.9 Status LED ... 113
13.9.1 Basic functions ... 114
13.9.2 Colour settings ... 116
13.9.3 Brightness settings ... 118
14 Channel-independent device functions ... 127
14.1 LED alarm signal ... 128
14.2 LED orientation lighting ... 132
14.3 LED night reduction ... 135
14.4 Disabling function ... 138
14.5 Scene function ... 159
14.6 Temperature measurement ... 167
14.7 Room humidity measurement ... 175
14.8 Air quality ... 177
14.8.2 VOC measurement ... 181
14.8.3 VOC (IAQ) measurement ... 187
14.8.4 eCO2 measurement ... 191
14.9 Transmission delay ... 195

1 Information on the product

1.1 Product catalogue

Product name	Pushbutton sensor 4.55 Komfort, 1-gang
	Pushbutton sensor 4.55 Komfort, 2-gang
	Pushbutton sensor 4.55 Komfort, 3-gang
Art. no.	5045 00, 5046 00, 5047 00
Use	Sensor
Design	FM (flush-mounted)

1.2 Purpose

General

The device is KNX Data Secure compatible. KNX Data Secure offers protection against manipulation in building automation and can be configured in the ETS project. Detailed technical knowledge is a prerequisite. A device certificate, which is attached to the device, is required for safe commissioning. During mounting, it is recommended to remove the certificate from the device and to store it securely.

The device can be updated. Firmware can be easily updated with the Gira ETS Service App (additional software).

Push-button sensor function

When its buttons are actuated, the device sends telegrams to the KNX, depending on the ETS parameter settings. These can be telegrams for switching, for dimming the brightness and colour temperature or for controlling the shading. Value transmitters and scene extension functions can also be programmed. The value transmitter functions include, for example, temperature and brightness value transmitters or even the colour value transmitter RGBW.

The device has an integrated scene function. This can be used to control lighting and shading systems or various other units as needed by pressing just a single button. The scene function of the device supports 8 scenes, allowing control of KNX actuators via 8 scene outputs using switching or value telegrams.

The device can be used as a controller extension, i. e. as an operation and display element of a room temperature controller.

All buttons or individual buttons of the device can be disabled using the disabling function. During active disabling, the assigned buttons perform parameterised behaviour.

LED function

The device has two multi-colour status LEDs per operating element. These status LEDs can optionally be permanently on or off, or otherwise act as an actuation or status indicator for a button or a rocker. As an alternative, the status LEDs can also be activated via separate communication objects. The status LEDs can either indicate the switching status of an object statically or by flashing, or signal operating states of room temperature controllers. The status LEDs can light up in 8 different colours. The colour of the status LEDs can be configured in the ETS either globally or separately, as required. Optionally a superposed function can be activated via the bus, in which the colour and display information of individual status LEDs can be changed according to priority.

The colour of the status LED can either be parameterised for all status LEDs together or separately for each status LED.

All status LEDs can additionally be used as orientation lighting or for indicating an alarm.

The brightness of all status LEDs is adjustable in six stages using a common parameter. A separate communication object allows the brightness to be reduced, e.g. during night hours.

i When the application program is discharged and the bus voltage is connected, all status LEDs initially light up white. Whenever a button is actuated, the respective illuminated status LED changes colour (white → red → green → blue → yellow → cyan → orange → violet → white → ...).

Measurement of the room temperature

As a supplement to the controller extension the device has an integrated temperature sensor that makes it possible to measure and forward the local room temperature. A wired sensor or a temperature value receive via an object can optionally supplement the room temperature measurement performed by the internal temperature sensor to improve the measurement result. The device offers a second temperature measurement via the wired sensor, which is independent from the room temperature measurement, if the sensor is not already used for room temperature measurement.

Measurement of the room humidity

The device has an integrated humidity sensor that can be used to measure and forward the ambient room humidity.

Air quality measurement

The push-button sensor can perform three measurements to determine the air quality.

The device has an integrated VOC sensor, which is used to measure the VOC. With the measured VOC values, the device is able to determine VOC (IAQ) values and eCO2 values.

1.3 Device components

Front view

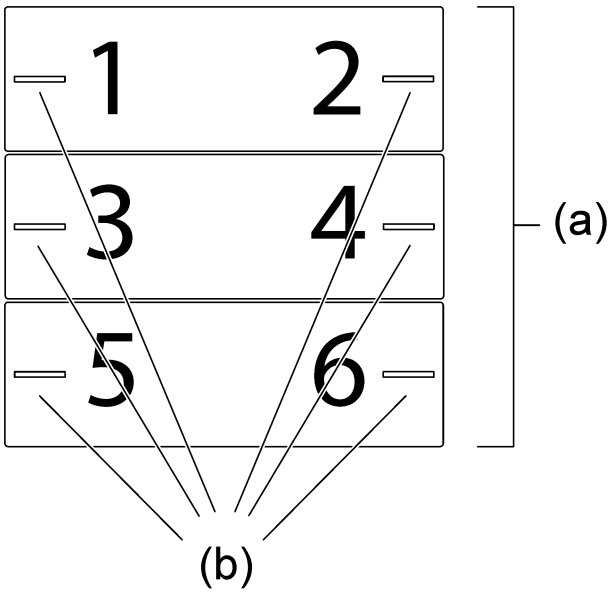

Figure 1: Device components 3-gang (installation position: "standard installation position", horizontal rockers)

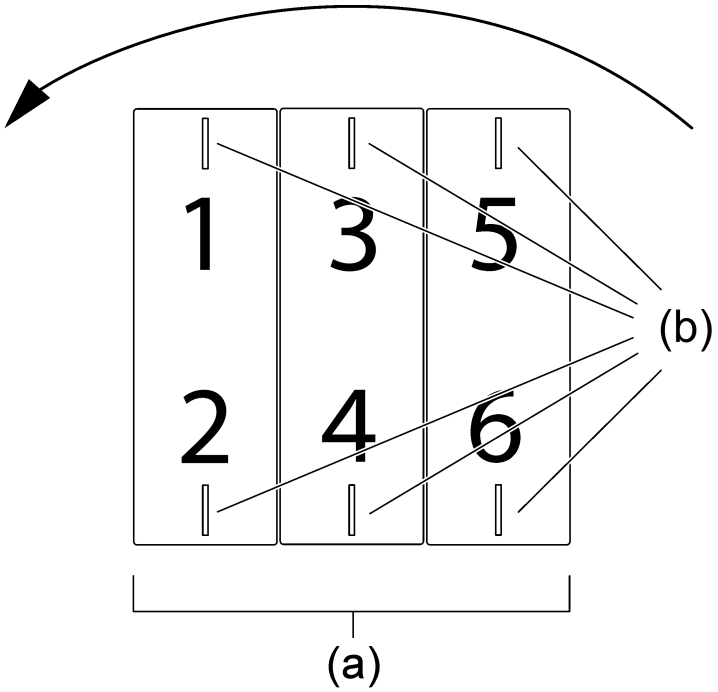

Figure 2: Device components 3-gang (installation position: "turned by -90°", vertical rockers)

(a) Operating rockers (accessory)
(b) Status LED
1...6 Buttons assignment and status LED

Rear view

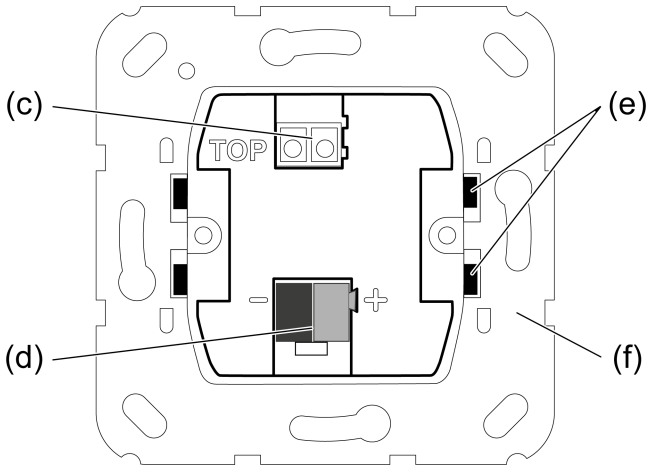

Figure 3: Device components - rear side

(c) Device connection terminal for remote sensor
(d) Device connection terminal KNX
(e) Retaining clips for device fixation at the supporting frame
(f) Supporting frame

1.4 As-delivered state

In the delivery state, the orientation lighting LED is activated. When the bus voltage is connected, all status LEDs initially light up white. Whenever a button is actuated, the respective illuminated status LED changes colour in the following sequence:

white → red → green → blue → yellow → cyan → orange → violet → white → ...

In the delivery state, the push-button sensor does not send any telegrams to the bus.

1.5 Technical data

KNX

KNX medium	TP256
Commissioning mode	S mode
Rated voltage	DC 21 ... 32 V SELV
Current consumption KNX	8 ... 18 mA
Connection mode KNX	Standard device connection terminal
Connecting cable KNX	EIB-Y (St)Y 2x2x0.8
Protection class	III

Installation dimensions (see figure 4)

Construction height	A = 11.9 mm A = 12.5 mm (stainless steel rocker set)
Installation depth	B = 13.8 mm

Connection cable remote sensor (see accessories)

Cable type extension	NYM-J 3×1.5 or J-Y(St)Y 2×2×0.8
Total length remote sensor line	max. 30 m

Ambient conditions

Ambient temperature	-5 ... +45 °C
Storage/transport temperature	-20 ... +70 °C
Relative humidity	5 ... 95% (no condensation)

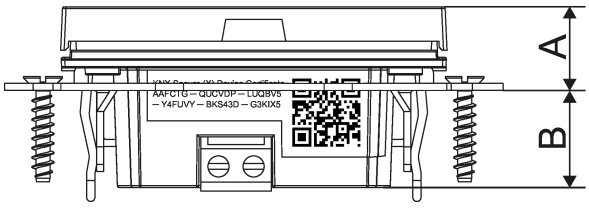

Figure 4: Installation dimensions

1.6 Accessories

Individually labelled rocker sets are available from the Gira inscription service www.beschriftung.gira.de.

Rocker set, 1-gang for pushbutton sensor 4.55	Art. no. 5751 ..
Rocker set, 1-gang, inscribable, for pushbutton sensor 4.55	Art. no. 5761 ..
Rocker set, 1-gang, inscribable, for pushbutton sensor 4.55	Art. no. 5771 ..
Rocker set, 2-gang for pushbutton sensor 4.55	Art. no. 5752 ..
Rocker set, 2-gang, inscribable, for pushbutton sensor 4.55	Art. no. 5762 ..
Rocker set, 2-gang, inscribable, for pushbutton sensor 4.55	Art. no. 5772 ..
Rocker set, 4-gang for pushbutton sensor 4.55	Art. no. 5753 ..
Rocker set, 4-gang, inscribable, for pushbutton sensor 4.55	Art. no. 5763 ..
Rocker set, 3-gang, inscribable, for pushbutton sensor 4.55	Art. no. 5773 ..
Remote sensor	Art. no. 1493 00

2 Safety instructions

Electric devices may only be mounted and connected by electrically skilled persons.

Serious injuries, fire or property damage are possible. Please read and follow the manual fully.

Danger of electric shock. Comply with the regulations and standards that apply to SELV circuits during the installation and cable routing.

3 Mounting and electrical connection

DANGER!

Mortal danger of electric shock.

Cover up live parts in the installation environment.

The push-button sensor (see figure 5) can be installed horizontally ("standard installation position") or vertically ("turned by -90°" installation position).

For horizontal installation ("standard installation position") the top of the push-button sensor is labelled with **TOP**.

For vertical installation ("turned by -90°" installation position) the left side of the push-button sensor is labelled with **TOP**.

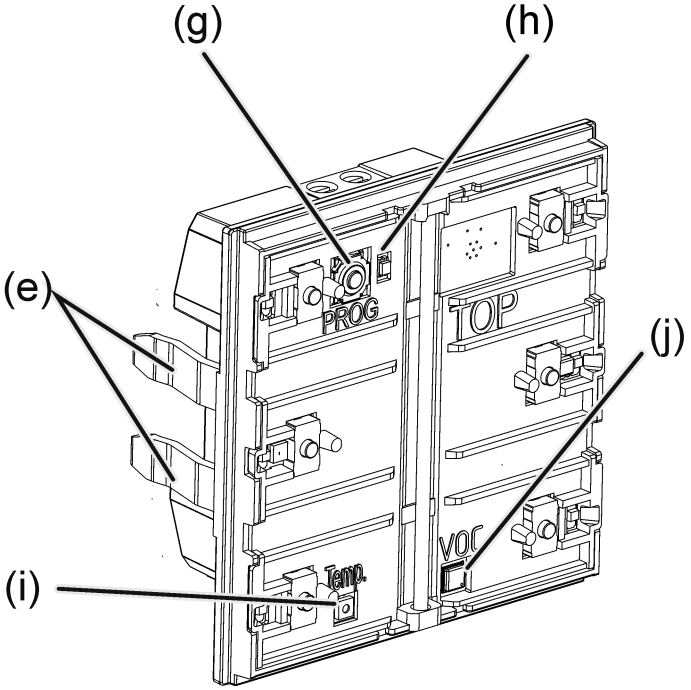

Figure 5: Push-button sensor

(e) Retaining clips for device fixation at the supporting frame
(g) Programming button
(h) Programming LED
(i) Temperature sensor
(j) VOC sensor

Mounting and connecting the device

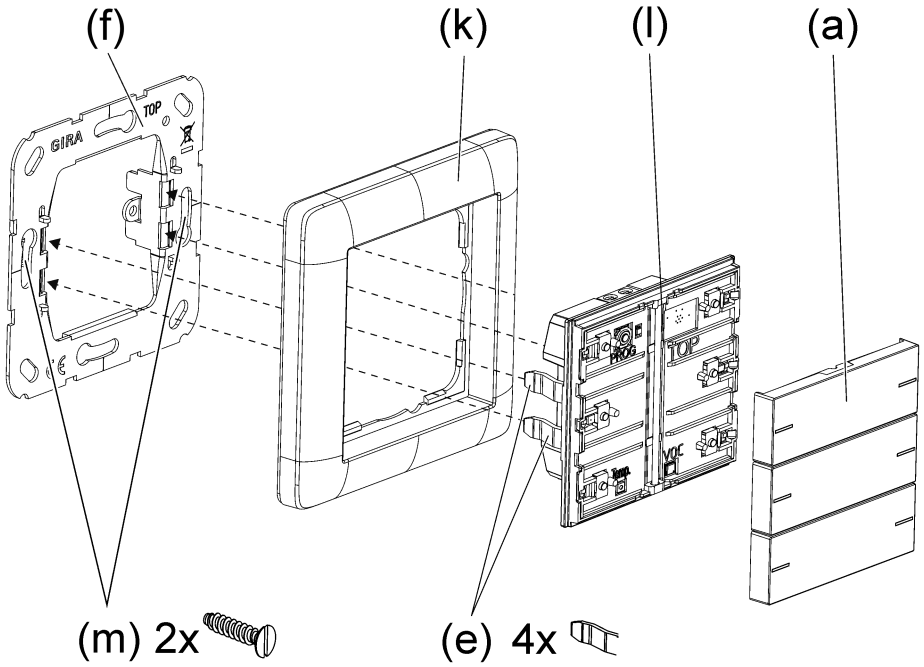

Figure 6: Mount device

(a) Operating rockers (accessory)
(e) Retaining clips for device fixation at the supporting frame
(f) Supporting frame
(k) Cover frame (accessory)
(l) Push-button sensor
(m) Box screws

i The device should be used in an air-tight appliance box. Otherwise temperature and humidity reading can be negatively influenced by draughts.

In secure operation (prerequisites):

- Secure commissioning has been activated in the ETS.
- Device certificate entered/scanned or added to the ETS project. A high resolution camera should be used to scan the QR code.
- Document all passwords and keep them safe.

Precondition: The installation position of the push-button sensor is defined.

- Mount supporting frame in the right orientation, "standard installation position" or "turned by -90°", on an appliance box.

i Note the **TOP** marking.

i Use the enclosed box screws.

- Pull off commissioning rockers from push-button sensor.

The push-button sensor is delivered with commissioning rockers. The operating rockers suitable for the push-button sensor must be ordered separately (see accessories).

- Connect push-button sensor to the KNX using KNX device connection terminal (red = +, black = -).
- In secure operation: The device certificate must be removed from the device and stored securely.
- Optional: Connect remote sensor (see accessories) to device connection terminal for remote sensor.
- Fit the cover frame flush. The cover frame is fixed via the push-button sensor.
- Attach the push-button sensor with cover frame onto the supporting frame.

Push-button sensor can be put into operation.

Make sure the that the retaining clips properly fit in the supporting frame.

The physical address is programmed (see chapter "Commissioning" ▸ Page 14) in the next work step. The rockers can then be mounted (see chapter "Mounting the rockers" ▸ Page 17).

4 Commissioning

Programming the physical address and application program

Project design and commissioning with ETS version 5.7.7 and higher or ETS 6.3.0.

The programming button is located under the first rocker.

Precondition: The device is connected and ready for operation.
The first rocker is dismantled.

- Activating Programming mode: push the programming button.

  The programming LED lights up red. Programming mode is activated.
- Programming the physical address.

  The programming LED goes out. Physical address is programmed.
- Programming the application program.

  The device is for use.

All status LEDs are switched off while the application program is programmed. As soon as the programming is successfully completed, the status LEDs carry out their parameterised function.

When the application program is discharged and the bus voltage is connected, all status LEDs initially light up white. Whenever a button is actuated, the respective illuminated status LED changes colour (white → red → green → blue → yellow → cyan → orange → violet → white → ...).

4.1 Safe-state mode

The safe-state mode stops the execution of the loaded application program.

If the device does not work properly - for instance as a result of errors in the project design or during commissioning - the execution of the loaded application program can be halted by activating the safe-state mode. The device remains passive in safe-state mode, since the application program is not being executed (state of execution: terminated).

Only the system software of the device is still functional. ETS diagnosis functions and programming of the device are possible.

Activating safe-state mode

- Switch off the voltage.
- Press and hold down the programming button.
- Switch on voltage.

  Safe-state mode is activated. The programming LED flashes slowly (approx. 1 Hz).

Release the programming button only after the programming LED starts flashing.

Deactivating safe-state mode

- Switch off the voltage or carry out ETS programming.

4.2 Master reset

The master reset restores the basic device settings (physical address 15.15.255, firmware remains in place). The device must then be recommissioned with the ETS.

In secure operation, a master reset will deactivate the device security. The device can then be recommissioned with the device certificate.

Devices can be reset to factory settings with the ETS Service App. This function uses the firmware included in the device that was active at the time of delivery (delivery state). Restoring the factory settings causes the devices to lose their physical address and configuration.

If the device - for instance as a result of errors in the project design or during commissioning - does not work properly, the loaded application program can be deleted from the device by performing a master reset. The master reset resets the device to delivery state. Afterwards, the device can be put into operation again by programming the physical address and application program.

Performing a master reset

Prerequisite: safe-state mode is activated.

- Press and hold down the programming button for > 5 seconds until the programming LED starts flashing quickly.
- Release the programming button.

  The device performs a master reset. The programming LED is switched on.

  The device restarts and is in delivery state.

5 Mounting the rockers

- Slide the side of the rocker into place (see figure 7).

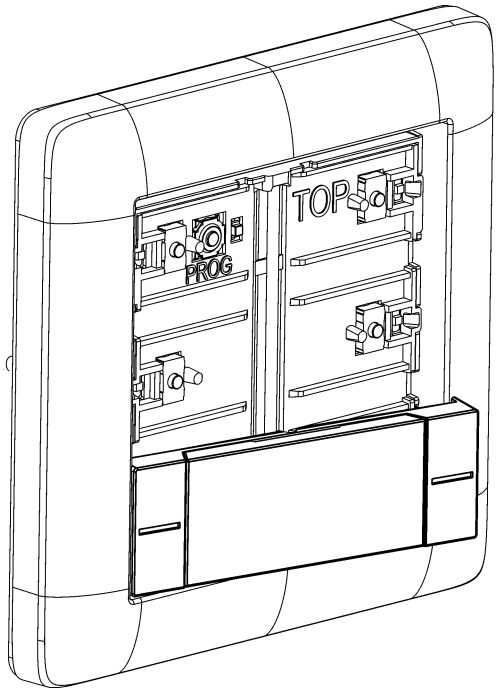

Figure 7: Slide the side of the rocker into place

- Press in the middle of the rocker (see figure 8).

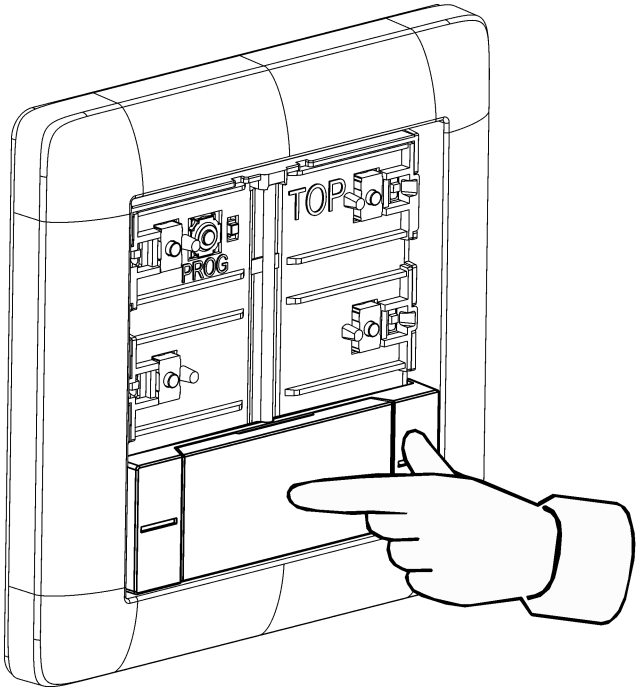

Figure 8: Press lightly in the middle of the rocker

The rocker snaps into place.

Device is ready for operation.

In order to optimise the gap dimensions between the rockers and the cover frame, the rockers can be moved slightly after snapping into place.

6 Dismantling

- Carefully pull the push-button sensor forward together with the cover frame.
- Pull the rockers on one side to loosen them from the push-button sensor.

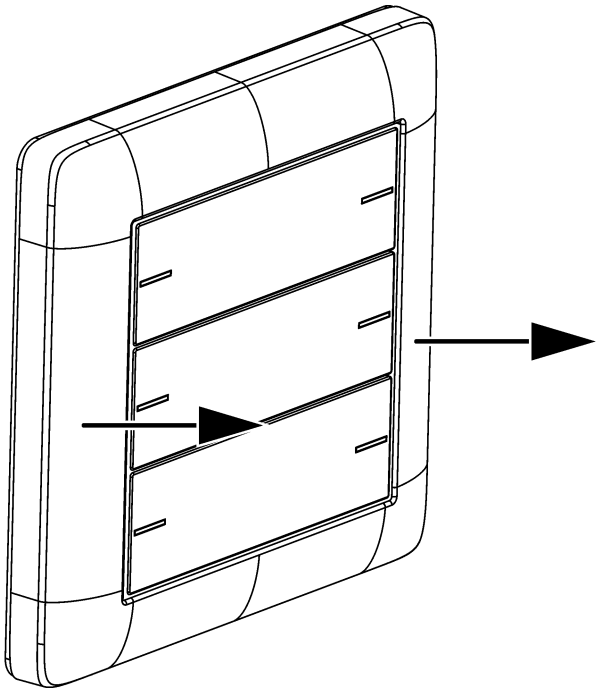

Figure 9: Dismantle the push-button sensor

7 Exchanging the labelling field

The rocker has a labelling field

- Search for a notch in the cover of the labelling field by feeling with a finger (see figure 10).
- Pull on one side at the notch in the cover of the labelling field to separate from the rocker (see figure 11).

  The labelling field is uncovered.

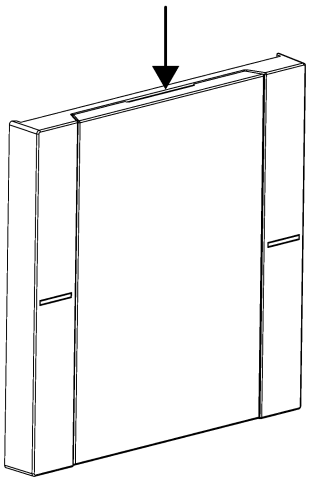

Figure 10: Feel for a notch in the labelling field cover

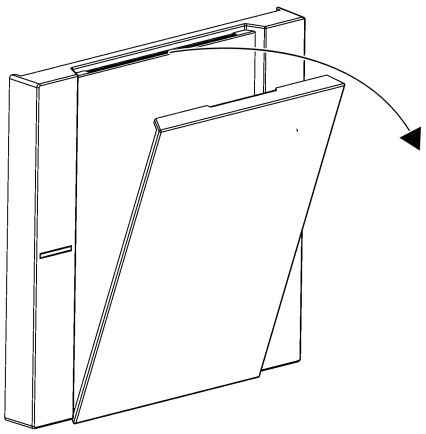

Figure 11: Remove the labelling field cover

- Exchanging the labelling field.
- Press the cover of the labelling field onto the rocker so that it snaps into place.

  The labelling field is exchanged.

8 Operation

Operating areas

The device consists of up to 3 operating areas, depending on the device variant. The operating concept of an operating element can be configured in the ETS as a rocker function or as a button function. With the rocker function, an operating element is divided into two actuation pressure points (left/right or top/bottom) with the same basic function. With the button function, an operating element is divided into 2 functionally-separate actuation pressure points located next to each other or one above the other (2 buttons).

The installation position of the device can be configured. With the rocker function, two buttons located either next to each other or one above the other are combined into one rocker. With the button function, each button is evaluated individually.

When its buttons are actuated, the device sends telegrams to the KNX, depending on the ETS parameter settings (switching, dimming, shading, ...).

Operating element as rocker function

In the "rocker function" operating concept, two adjacent actuation pressure points are used as a rocker. The two pressure points are then termed "left rocker" and "right rocker" or "top rocker" and "bottom rocker", depending on the installation position. Pressing the buttons affect the communication objects assigned to the rocker. Usually, pressing both sides of a rocker can lead to directly opposite reactions
(e.g. switching: left/top ON - right/bottom OFF /
shading: left/top UP - right/bottom DOWN).

Figure 12: Rocker operation, left (installation position = standard installation position)

Figure 13: Rocker operation, right (installation position = standard installation position)

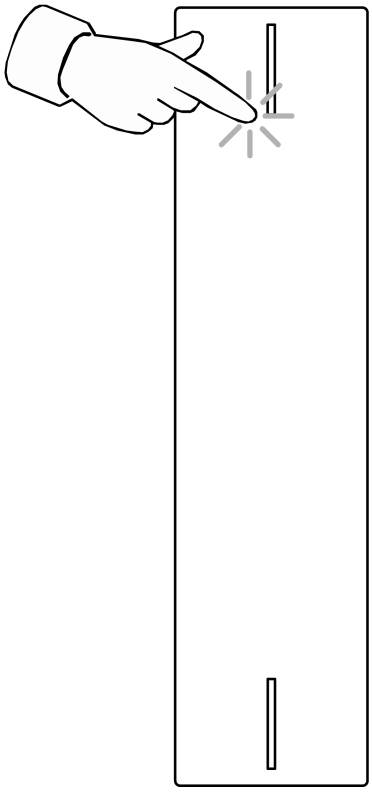

Figure 14: Rocker operation, top (installation position = turned by -90°)

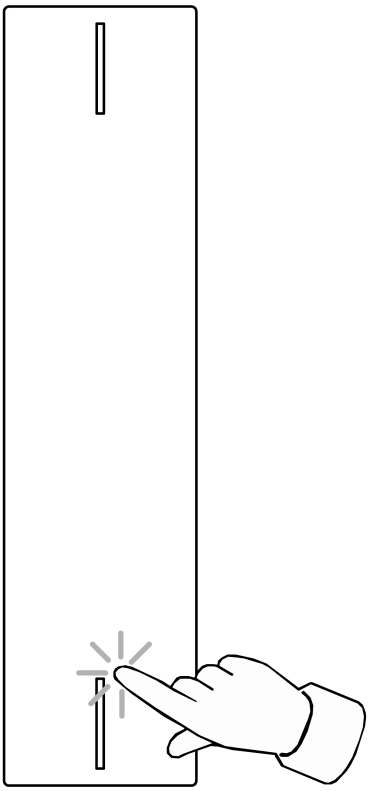

Figure 15: Rocker operation, bottom (installation position = turned by -90°)

Operating element as button function

With the "button function" operating concept, an operating element is divided into two separate and functionally independent buttons. The buttons are configured independently of each other and can fulfil different functions (e.g. switching: TOGGLE – value transmitter: 2-byte temperature value).

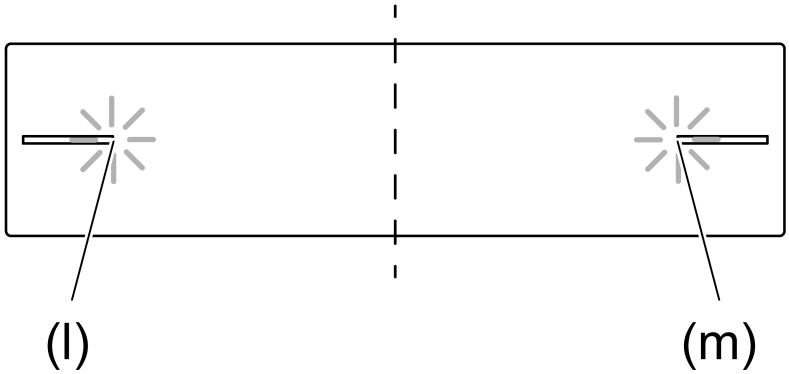

Figure 16: Button actuation (installation position = standard installation position)

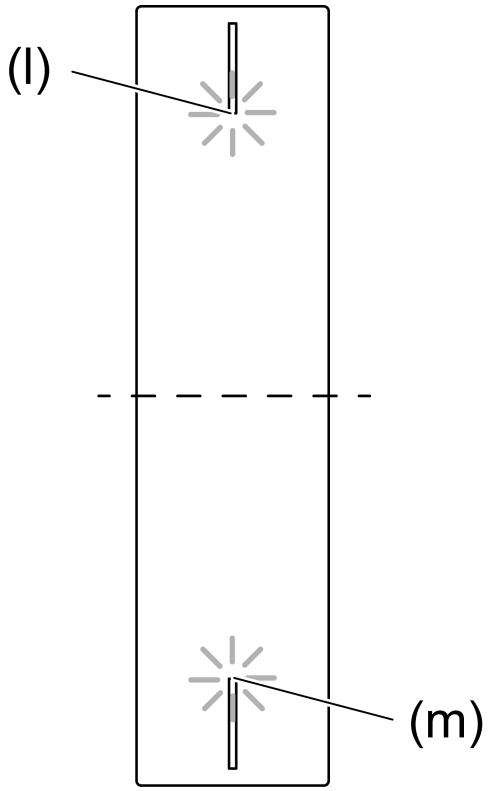

Figure 17: Button actuation (installation position = turned by -90°)

(l) Left or top button of the operating element
(Depending on the device variant: button 1, button 3, button 5)

(m) Right or bottom button of the operating element
(Depending on the device variant: button 2, button 4, button 6)

9 Application programs

ETS search paths:	Push-button / push-button, 1-gang / Pushbutton sensor 4.55 Komfort, 1-gang
	Push-button / push-button, 2-gang / Pushbutton sensor 4.55 Komfort, 2-gang
	Push-button / push-button, 3-gang / Pushbutton sensor 4.55 Komfort, 3-gang
Configuration:	S-mode standard

Available application programs for Pushbutton sensor 4.55 Komfort, 1-gang

Name	Pushbutton sensor 4.55 Komfort, 1-gang 118122
Version	2.2 for ETS from version 5.7.7 or 6.3.0
Compatibility	Art. no.: 5045 00, I00
From mask version	07B0
Summarized description	ETS application programme for two buttons or a rocker, freely configurable for switching, dimming, colour control, shading, value transmitters, scenes and controllers, with disabling functions, configurable status LED control, and temperature, humidity and air quality measurement.
	This application program is compatible with the following firmware version: V01.00.01. Compatible devices have the designation "I00".
	KNX Data Secure capable
	Update-capable

Available application programs for Pushbutton sensor 4.55 Komfort, 2-gang

Name	Pushbutton sensor 4.55 Komfort, 2-gang 118222
Version	2.2 for ETS from version 5.7.7 or 6.3.0
Compatibility	Art. no.: 5046 00, I00
From mask version	07B0
Summarized description	ETS application programme for four buttons or two rockers, freely configurable for switching, dimming, colour control, shading, value transmitters, scenes and controllers, with disabling functions, configurable status LED control, and temperature, humidity and air quality measurement.
	This application program is compatible with the following firmware version: V01.00.01. Compatible devices have the designation "I00".
	KNX Data Secure capable

Update-capable

Available application programs for Pushbutton sensor 4.55 Komfort, 3-gang

Name	Pushbutton sensor 4.55 Komfort, 3-gang 118322
Version	2.2 for ETS from version 5.7.7 or 6.3.0
Compatibility	Art. no.: 5047 00, I00
From mask version	07B0
Summarized description	ETS application programme for six buttons or three rockers, freely configurable for switching, dimming, colour control, shading, value transmitter, scenes and controllers, with disabling functions, configurable status LED control, and temperature, humidity and air quality measurement. This application program is compatible with the following firmware version: V01.00.01. Compatible devices have the designation "I00". KNX Data Secure capable Update-capable

10 Notes on the software

ETS project design and commissioning

Project design and commissioning of the device with the following ETS versions:

- ETS 5.7.7,
- ETS 6.3.0 or higher

The necessary product database is offered in the *.knxprod format. No product database is available for ETS2, ETS3 and older versions of ETS4.

10.1 Device generations and using the application programs

There are different device generations and application programs available. It is possible to distinguish between the device generations by means of the version designation.

Only application programs with the version 2.2 or higher can be programmed in devices (Art. No. 5045 00, 5046 00, 5047 00) with device generation I00 or higher. Application programs with the version 2.1 cannot be programmed in devices (Art. No. 5045 00, 5046 00, 5047 00) with the device generation I00 or higher.

The designation of the device generation is attached on the device.

11 Scope of functions

General

- KNX Data Secure compatible
- Firmware updates are possible

Push-button sensor functions

- Operating concept can be configured (rocker function or button function)
- The button function can be configured (switching, dimming of brightness and colour temperature, colour control, shading, value transmitter, scene extension unit, 2-channel operation, controller extension, no function)
- The rocker function can be configured (switching, dimming the brightness and colour temperature, colour control, shading, value transmitter, scene extension unit, 2-channel operation, controller extension)

  Switching: The command on pressing and/or releasing is adjustable (no reaction, switch on, switch off, toggle).

  Dimming the brightness and colour temperature: The command on pressing, the time between switching and dimming, the dimming in different levels, the telegram repetition on long press and the transmission of a stop telegram at the end of the press is adjustable.

  Colour control: The type of colour control, the colour space and the colour values are adjustable. The command on pressing, the time between switching and the colour sequence / brightness adjustment, the starting value and the step width of the setting, as well as the telegram repetition on long press are adjustable.

  Shading: The command on pressing and the operating concept are adjustable. The operating concept can be adjusted in the times for short and long actuation and slat adjustment.

  Value transmitter: The operating mode (1-byte, 2-byte, 3-byte or 6-byte value transmitter) and the value is adjustable.

  Scene extension for internal or external scene recall. Scenes can be called up or toggled. A memory or dimming function is optionally executed with a long press of the button.

  2-channel operation: Up to two telegrams can be transmitted to the KNX by one button-press. The operating concept can be adjusted and the time for short and long actuation adapted. The function of the channels is adjustable separately.

  Controller extension: The function (operating mode selection, forced operating mode switch-over, presence function and setpoint shift) is adjustable.
- Disabling function can be activated

  The rockers or buttons can be disabled via a 1-bit object. The polarity of the disabling object can be set. During an active disable, all or some of the rockers/buttons can have no function, can perform the function of a selected button or execute one of two settable disabling functions.

Controller extension functions

- The controller extension can be configured as a function of a rocker or button

  Full control of a room temperature controller (operating modes, presence functions and setpoint shift).
- The displays of the controller extension can be configured as a function of the status LED

  Full-featured indication of the controller status via the status LED of the extension unit (heating / cooling reporting, setpoint shift, room temperature, setpoint temperature and current operating mode).
- Temperature measurement can be activated

  Measurement of the room temperature with an internal sensor or optionally by determining the measured value of the internally measured temperature with an external temperature.

Status LED

- Function can be configured

  The function is selected per status LED

  When selecting the function, the following functions can be configured: Always OFF, Always ON, button actuation indicator, telegram acknowledgment, status indicator, activation via separate LED object, operating mode indicator, controller status indicator, presence status indicator, setpoint shift indicator
- Optionally a superposed function can be activated via the bus, in which the colour and display information of individual status LEDs can be changed according to priority.
- Colour can be configured

  The colour is selected either together for all status LEDs or separately for each status LED of the device.

  The status LEDs can light up in red, green, blue, yellow, cyan, orange, violet or white, according to choice.
- Brightness can be configured

  The brightness of the status LED can be set to six levels.

  Through night reduction, the brightness of the status LED can be reduced at night using a communication object.
- LED alarm signal:

  All LEDs of the push-button sensor can flash red simultaneously in the event of an alarm. The following settings are possible: Value of alarm signalling object for the states alarm and no alarm, alarm acknowledge by actuation of a button, transmission of the acknowledge signal to other devices.
- LED orientation lighting:

  All LEDs can be switched permanently off or on for the purpose of orientation, display the status of a separate communication object (ON, OFF, flashing) or be switched on by pressing any desired button and switched off again automatically after a delay time has elapsed.
- LED night reduction:

Alternatively, communication object control can be used to change the brightness of all status LEDs. This makes it possible, for example, to reduce the brightness during nighttime hours to a value configured in the ETS.

General functions

- Disabling function:

  The operating areas can be disabled via a 1-bit object. During an active disable, all or some of the rockers/buttons can have no function, can perform the function of a selected button or execute one of two settable disabling functions.
- Scene function:

  Internal storage of up to eight scenes with eight output channels, recall of internal scenes by means of a settable scene number, selection of object types for the output channels; for each scene, the storage of the individual output values and the transmission of the output values can be permitted or inhibited; the individual channels can be delayed during scene recall; as scene extension unit, 64 scenes can be recalled and stored.
- Temperature measurement

  Up to two temperature measurements possible via internal sensor, wired sensor, internal and wired sensor, as well as internal and external sensor.
- Room humidity measurement

  Room humidity measurement possible via internal sensor.
- Air quality

  Measurement of the air quality values VOC, VOC (IAQ) and eCO2.

12 General settings

The "KNX Secure" parameter page provides information about KNX Data Secure. No parameterisation is performed on this parameter page.

The installation position of the push-button sensor is defined on the parameter page "General -> Installation position".

On the parameter page "General - Basic settings", general settings of the push-button sensor are configured and general functions enabled.

12.1 Installation position

The push-button sensor can be installed horizontally ("standard installation position") or vertically ("turned by -90°" installation position).

The installation position of the device can be configured. The structural design of the application program depends on this setting. For this reason, this is the first setting to be made. Only then should device, rocker and button functions be configured.

Either two buttons next to each other or two buttons located one above the other are combined into one rocker.

i In the case of horizontal installation, the TOP marking can be read at the top right.

i In the case of vertical installation, the TOP marking can be read at the top left.

The device sorts the button assignments automatically according to the installation position Device components. The ETS indicates the arrangement of the buttons and rockers with graphics and icons.

12.1.1 Table of parameters

"Installation position" parameter page

Installation position	**Standard installation position (horizontal)** Turned by -90° (vertical)
The installation position of the push-button sensor is set here. Graphics and icons show the arrangement of the buttons and rockers in accordance with this setting. i The installation position should be defined and set before configuring the device functions, because previous configurations are lost if the "Installation position" parameter is changed.	

12.2 Basic settings

The operating concepts of all device buttons are configured in the basic settings. The ETS indicates the arrangement of the buttons and rockers with graphics and icons in accordance with the parameterized installation position and the set operating concept.

In addition, general settings of the status LED can be configured in the basic settings. These settings apply to all status LEDs of the device.

Furthermore, the following functions can be enabled:

- LED alarm signal
- LED orientation lighting
- LED night reduction
- Disabling function
- Scene function
- Temperature measurement
- Room humidity measurement

These functions are configured on separate parameter pages.

Rocker and button function

The rocker and button functions are configured on the Rocker *n* and Button *m* parameter pages. The following functions are available for selection:

- Switching
- Dimming and colour temperature
- Colour control and brightness
- Shading
- Value transmitter
- Scene extension unit
- 2-channel operation
- Controller extension

Table of parameters

The following parameter is available on the "General -> Basic settings" parameter page under the "Operating concept" header.

Operating concept of buttons *n* and *m*	**Rocker function** Button function
For each operating element, the user can specify independently whether it is to be used as a rocker with a common basic function or as two different buttons with completely independent functions. Depending on this setting, the ETS displays different communication objects and parameter pages.	

The following parameter is available on the "Rocker *n*" or "Button *m*" parameter page.

Function	**Switching** Dimming and colour temperature Colour control and brightness Shading Value transmitter Scene extension unit 2-channel operation Controller extension
Each rocker or button can perform one of these functions. Corresponding to this selection, the ETS compiles the appropriate parameters and objects for the function.	

The following parameters are available on the "General -> Basic settings" parameter page under the "Status LED" header.

Colour	Red Green Blue Yellow Cyan Orange Violet **White** Colour selection per status LED
The colour of the status LED can be selected here. In the colour configuration a distinction is made between whether all of the status LEDs of the push-button sensor have the same colour or whether alternatively various colours can be configured for the LEDs ("Colour selection per status LED" setting). With colour selection per rocker or button it is possible to set the colour on the parameter pages of the individual status LEDs.	

Brightness	Level 0 (OFF) Level 1 (dark) Level 2 Level 3 **Level 4** Level 5 (bright)
The brightness level for all status LEDs is defined at this point.	

Light duration of status LED for button-actuation display	1 s 2 s **3 s** 4 s 5 s
This parameter defines the switch-on time the status LED is lit up to indicate actuation. The setting concerns all status LEDs whose function is set to "Button-actuation display".	

The following parameters are available on the "General -> Basic settings" parameter page under the "Enabled functions" header.

LED alarm signal	Active **Inactive**
The LED alarm signalling of the device can be centrally enabled at this point. If "Active", the ETS shows further communication object and parameters.	

LED orientation lighting	Active **Inactive**
The LED orientation lighting of the device can be centrally enabled at this point. If "Active", the ETS shows further communication object and parameters.	

LED night reduction	Active **Inactive**
The LED night reduction of the status LED can be centrally enabled at this point. If "Active", the ETS shows further communication object and parameters.	

Disabling function	Active **Inactive**
With this parameter, the disabling function of the device can be centrally activated. If "Active", the ETS shows further communication object and parameters.	

Scene function	Active **Inactive**
The scene function of the device can be centrally enabled at this point. If "Active", the ETS shows further communication object and parameters.	

Temperature measurement	Active **Inactive**
The temperature measurement of the device can be centrally enabled at this point. If "Active", the ETS shows further communication object and parameters.	

Room humidity measurement	Active **Inactive**
The room humidity measurement of the device can be centrally enabled at this point. If "Active", the ETS shows further communication object and parameters.	

13 Channel-oriented device functions

The following subchapters provide a description of the device functions. Each subchapter consists of the following sections:

- Functional description
- Table of parameters
- Object list

Functional description

The functional description explains the function and provides helpful tips on project design and usage of the function. Cross references support you in your search for further information.

Table of parameters

The table of parameters lists all parameters associated with the function. Each parameter is documented in a table as follows.

Name of the parameter	Parameter values
Parameter description	

Object list

The object list specifies and describes all communication objects associated with the function. Each communication object is documented in a table.

Function	This column contains the function of the communication object.
Name	This column contains the name of the communication object.
Type	This column contains the length of the communication object.
DPT	This column assigns a datapoint type to a communication object. Datapoint types are standardized in order to ensure interoperability of KNX devices.
Flag	This column assigns the communication flags in accordance with the KNX specification.
C-Flag	activates / deactivates the communication of the communication object
R-Flag	enables externally triggered reading of the value from the communication object
W-Flag	enables externally triggered writing of the value to the communication object
T-Flag	enables transfer of a value
U-Flag	enables updating of an object value in case of feedback
I-Flag	enforces updating of the communication object value when the devices is switched on (reading at init)

13.1 Switching

For each rocker or button whose function is set to "switching", the ETS shows up to two 1-bit communication objects. The parameters permit fixing the value the "switching" object is to assume on pressing and/or releasing (ON, OFF, TOGGLE – toggling of the object value). No distinction is made between a brief or long press.

13.1.1 Table of parameters

The following parameters are available for the individual buttons or rockers, depending on the set operating concept. The default settings change in accordance with the set operating concept.

Command on pressing	No reaction ON OFF **TOGGLE**
This parameter defines the reaction when the operating element is pressed.	

Command on releasing	**No reaction** ON OFF TOGGLE
This parameter defines the reaction when the operating element is released.	

13.1.2 Object list

The following communication objects are available for the individual buttons or rockers, depending on the set operating concept. The object name corresponds to the selection for the operating concept (button or rocker). The name of the object can be specified by the parameter "Name of ..." parameter.

Function	Name	Type	DPT	Flag
Switching	Button/rocker *n* - output	1-bit	1,001	C, -, W, T, -
1-bit object for transmission of switching telegrams (ON, OFF).				

Function	Name	Type	DPT	Flag
Switching feedback	Button/rocker *n* - input	1-bit	1,001	C, -, W, -, U
1-bit object for receiving feedback telegrams (ON, OFF).				

13.2 Dimming and colour temperature

For each rocker or button with the function set to "dimming and colour control", the ETS indicates two 1-bit objects and one 4-bit or 3-byte object. Generally, the device transmits a switching telegram after a brief actuation and a dimming telegram after a long actuation. In the standard parameterisation the device transmits a telegram for stopping the dimming action after a long actuation. The time needed by the device to detect an actuation as a long actuation can be set in the parameters. The brightness or the colour temperature can be dimmed.

Feedback

If an actuator is controlled from multiple control elements, the actuator must report its switching status to the 1-bit object "Switching feedback" of the button or rocker. Due to the feedback, the device detects that the actuator has changed its switching status by input from another element and adjusts the dimming direction accordingly.

The dimming direction is always only evaluated and switched locally, unless the actuator changes its switching status due to input from multiple elements (e. g. lighting ON / change of brightness value only). The 4-bit dimming objects and the 3-byte combi object are not tracked via the bus.

Advanced configuration options

The device has advanced parameters for the dimming function. If necessary, these advanced parameters can be activated and thus be made visible.

The advanced parameters can be used to determine whether the device is to cover the full adjusting range of the actuator with one dimming telegram continuously ("Increase brightness / colour temperature by 100%", "Reduce brightness / colour temperature by 100%") or whether the dimming range is to be divided into several small levels (50%, 25%, 12.5%, 6%, 3%, 1.5%).

In the continuous dimming mode (100%), the device transmits a telegram only at the beginning of the long press to start the dimming process and generally a stop telegram after the end of the press. For dimming in small levels it may be useful if the device repeats the dimming telegram in case of a sustained press for a time that can be set (parameter "Telegram repetition"). The stop telegram after the end of the press is then not needed.

i When the parameters are hidden ("Advanced parameters = deactivated"), the dimming range is set to 100%, the stop telegram is activated and the telegram repetition is deactivated.

13.2.1 Brightness

In the standard parameterisation, the brightness is dimmed, which is why the "Colour temperature control" parameter is set to inactive.

Even with "colour temperature control" activated, the brightness can be dimmed.

The control of the brightness in the "Dimming and colour temperature" function distinguishes between dual-area operation and single-area operation. The parameter "Brightness on pressing" defines the single-area or dual-area dimming function.

Dual-area operation	Single-area operation
Brighter (ON)	Brighter/darker (TOGGLE)
Darker (OFF)	Brighter (TOGGLE)
	Darker (TOGGLE)

With dual-area operation, the device transmits a telegram for switching on or off after a brief actuation, and a telegram for increasing the brightness ("Brighter") or dimming ("Darker") after a long actuation.

With single-area operation, the device transmits ON and OFF telegrams in an alternating pattern ("TOGGLE") for each brief actuation, and the "brighter" and "darker" telegrams in an alternating pattern for long actuation of the respective button.

13.2.2 Colour temperature

When "Colour temperature control" is activated, the colour temperature can be dimmed.

Even with "colour temperature control" activated, the brightness can be dimmed.

The "Dimming and colour temperature" function with the control of the colour temperature distinguishes between dual-area operation and single-area operation. The parameter "Colour temperature on pressing" defines the single-surface or double-surface dimming function.

Dual-area operation	Single-area operation
Increase (ON)	Increase / Reduce (TOGGLE)
Reduce (OFF)	Increase (TOGGLE)
	Reduce (TOGGLE)

With dual-area operation, the device transmits a telegram for switching on or off after a brief press, and a telegram for increasing or decreasing the colour temperature after a long press.

With single-area operation, the device transmits ON and OFF telegrams in an alternating pattern ("TOGGLE") for each brief press of the respective button, and "increase colour temperature" and "decrease colour temperature" telegrams in an alternating pattern for long actuations.

13.2.3 Brightness and colour temperature

If "colour temperature control" is activated, both the brightness and the colour temperature can be dimmed.

The dimming process can only adjust either the brightness or the colour temperature via individual objects.

Optionally, the brightness and the colour temperature can also be adjusted together via a combi object.

The "Dimming and colour temperature" function with the control of the brightness and colour temperature distinguishes between dual-area operation and single-area operation. The parameter "Brightness + colour temperature on pressing" defines the single-area or dual-area dimming function.

Dual-area operation	Single-area operation
Brighter + Increase (ON)	Brighter + Increase / Darker + Reduce (TOGGLE)
Darker + Reduce (OFF)	Brighter + Increase (TOGGLE)
	Darker + Reduce (TOGGLE)

With dual-area operation, the device transmits a telegram for switching on or off after a brief actuation, and a telegram for increasing the brightness / colour temperature or dimming the brightness / colour temperature after a long actuation.

With single-area operation, the device transmits ON and OFF telegrams in an alternating pattern ("TOGGLE") for each brief press of the respective button, and the "brighter + increase" and "darker + decrease" telegrams in an alternating pattern for long actuations.

13.2.4 Table of parameters

The following parameters are available for the individual buttons, depending on the set operating concept. The default settings change in accordance with the set operating concept.

Colour temperature control	**Inactive** Active
This parameter activates the variable colour temperature control and thus the Tunable White function. Additional parameters appear.	

Communication	**Individual objects** Combi object
With colour temperature control activated, either the brightness or the colour temperature can be dimmed via an individual object or the brightness and colour temperature can be controlled together via a combination object.	

Adjustment of	**Brightness** Colour temperature
For communication via individual objects, this parameter sets whether the brightness or the colour temperature is dimmed via an individual object.	

Brightness on pressing	No reaction Brighter (ON) Darker (OFF) **Brighter/darker (TOGGLE)** Brighter (TOGGLE) Darker (TOGGLE)
This parameter defines the reaction when a button is pressed. If the device is to toggle on a brief press, the corresponding switching objects of other sensors with the same function must be interlinked. This parameter is only visible with: – "Colour temperature control =Inactive" or – "Colour temperature control = Active" and – "Communication = Individual objects" and – "Adjustment of = Brightness"	

Colour temperature on pressing	No reaction Increase (ON) Reduce (OFF) **Increase / Reduce (TOGGLE)** Increase (TOGGLE) Reduce (TOGGLE)
This parameter defines the reaction when a button is pressed. If the device is to toggle on a brief press, the corresponding switching objects of other sensors with the same function must be interlinked. This parameter is only visible with: – "Colour temperature control = Active" and – "Communication = Individual objects" and – "Adjustment of = Colour temperature"	

Brightness + colour temperature on pressing	No reaction Brighter + Increase (ON) Darker + Reduce (OFF) **Brighter + Increase / Darker + Reduce (TOGGLE)** Brighter + Increase (TOGGLE) Darker + Reduce (TOGGLE)
This parameter defines the reaction when a button is pressed. If the device is to toggle on a brief press, the corresponding switching objects of other sensors with the same function must be interlinked. This parameter is only visible with: – "Colour temperature control = Active" and – "Communication = Combi object"	

Time between switching and dimming	**0** ... 50 s | 100 ... **400** ... 990 ms
This parameter defines how long the button must be pressed for a dimming telegram to be transmitted.	

Extended settings	Active **Inactive**
When the advanced parameters are activated, the ETS shows the following parameters.	

Dimming brightness by	1.5 % 3 % 6 % 12.5 % 25 % 50 % **100 %**
This parameter sets the relative dimming level when the brightness is increased. On each button actuation, the brightness is changed at maximum by the configured step width. It is recommended that the device repeats the dimming telegrams automatically, particularly with a small dimming level (see "Telegram repetition").	

Dimming darker by	1.5 % 3 % 6 % 12.5 % 25 % 50 % **100 %**
This parameter sets the relative dimming level when the brightness is reduced. On each button actuation, the brightness is changed at maximum by the configured step width. It is recommended that the device repeats the dimming telegrams automatically, particularly with a small dimming level (see "Telegram repetition").	

Increase colour temperature by	1.5 % 3 % 6 % 12.5 % 25 % 50 % **100 %**
This parameter sets the relative dimming level when the colour temperature is increased. On each button actuation, the brightness is changed at maximum by the configured step width. It is recommended that the device repeats the dimming telegrams automatically, particularly with a small dimming level (see "Telegram repetition").	

Reduce colour temperature by	1.5 % 3 % 6 % 12.5 % 25 % 50 % **100 %**
This parameter sets the relative dimming level when the colour temperature is reduced. On each button actuation, the brightness is changed at maximum by the configured step width. It is recommended that the device repeats the dimming telegrams automatically, particularly with a small dimming level (see "Telegram repetition").	

Stop telegram	**Active** Inactive
On "Active" the device transmits a telegram for stopping the dimming process when the button is released. i When the device transmits telegrams for dimming in smaller levels, the stop telegram is generally not needed.	

Telegram repetition	Active **Inactive**
This parameter can be used to activate telegram repetition for dimming. With telegram repetition activated, the device cyclically sends relative dimming telegrams (in the parameterised step width) to the bus if the button is pressed long.	

Time between two telegrams	**200 ms** 300 ms 400 ms 500 ms 750 ms 1 s 2 s
This parameter defines the interval at which the dimming telegrams are automatically repeated in the telegram repetition mode. This parameter is only visible if "Telegram repetition = active"!	

13.2.5 Object list

The following communication objects are available for the individual buttons or rockers, depending on the set operating concept. The name of the object corresponds to the selection of the operating concept and can be specified by the parameter "Name of ..." parameter.

Function	Name	Type	DPT	Flag
Switching	Button/rocker *n* - output	1-bit	1,001	C, -, W, T, -
1-bit object for transmission of switching telegrams (ON, OFF).				

Function	Name	Type	DPT	Flag
Dimming brightness	Button/rocker *n* - output	4-bit	3,007	C, -, W, T, -
4-bit object for sending relative dimming telegrams to adjust the brightness.				

Function	Name	Type	DPT	Flag
Dimming brightness + colour temperature	Button/rocker *n* - output	3-byte	250,600	C, -, W, T, -
3-byte object for sending dimming telegrams for adjusting the brightness and the colour temperature in combination.				

Function	Name	Type	DPT	Flag
Switching feedback	Button/rocker *n* - input	1-bit	1,001	C, -, W, -, U
1-bit object for receiving feedback telegrams (ON, OFF).				

Function	Name	Type	DPT	Flag
Dimming colour temperature	Button/rocker *n* - output	4-bit	3,007	C, -, W, T, -
4-bit object for sending relative dimming telegrams to adjust the colour temperature.				

13.3 Colour control and brightness

For each rocker or button with the function set to "colour control and brightness", the ETS indicates up to 10 objects. Generally, the device transmits a switching telegram (ON, OFF, TOGGLE) after a brief press to the bus, and cyclical telegrams for colour control after a long press. Either a colour sequence or a brightness adjustment can be achieved.

i The time needed by the device to detect an actuation as a long actuation can be set in the parameters.

The colour control is performed after parameterisation either in the colour space RGB or HSV. The colour space can be optionally expanded to include the white component. The bus communication can be performed either via individual objects or a combi object (only for RGB and RGBW). Using the parameters "Colour space" and "Communication" the data types of the communication objects are adjusted automatically.

Feedback

If an actuator is controlled from multiple control elements, the actuator must report its switching status and its colour values to the feedback objects of the button or rocker. Due to the feedback, the device detects that the actuator has changed its switching status by input from another element and adjusts its switching status or colour value accordingly.

Advanced configuration options

The device has advanced parameters for the colour control. If necessary, these advanced parameters can be activated and thus be made visible. The advanced parameters determine the source of the start value, the step width and the time between two telegrams of a value adjustment on a long press.

With the colour sequence, the step width is configured in degrees. The value adjustment takes place without a stop. As soon as the device reaches the lower or upper range limit, the device sends the value of this range limit and then inserts a pause whose duration corresponds to two steps. Thereafter, the device transmits a telegram with the value of the other range limit and continues the value adjustment in the same direction.

With the brightness adjustment, one step width for increase and one step width for reduction of brightness is parameterised as a percentage value. The brightness adjustment is done with stop.

i With hidden switched parameters ("Advanced parameters = deactivated"), the following default values are loaded to the device:

- Start value = same as the value from the feedback object
- Step width = 4° (only for colour sequence)
- Increase brightness = 2% (only for brightness adjustment)
- Reduce brightness = 2% (only for brightness adjustment)

– Time between two telegrams = 200 ms

13.3.1 Colour sequence

The colour sequence performs a value adjustment of the colour hue (H) in the range from 0 to 360°.

For the set colour space "RGB" or "RGBW", an adjustment of the colour hue (H) is converted internally in the device.

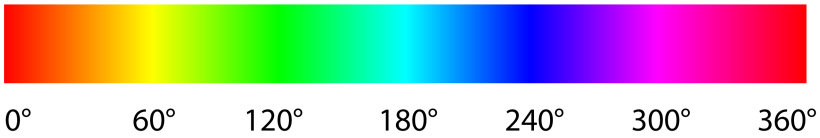

Figure 18: Colour scale (Colour hue H)

The colour sequence is realised according to the adjustment direction ("Command on pressing") and the step width via bus telegrams. During a colour sequence with a long actuation, the device cyclically sends new values to the bus, whereby the colour wheel is run through.

- Colour space HSV and HSVW: The colour hue (H) changes cyclically by the parameterised step width. The saturation (S) and the brightness value (V) remain unaffected by a colour pass.
- Colour space RGB and RGBW: Depending on the start position at the beginning of the adjustment, the values R, G or B change cyclically.

Colour sequence - Colour picker

Using the colour picker of the ETS, the colour wheel sequence can be traced by adjusting the slider of the H value from 0° to 360°.

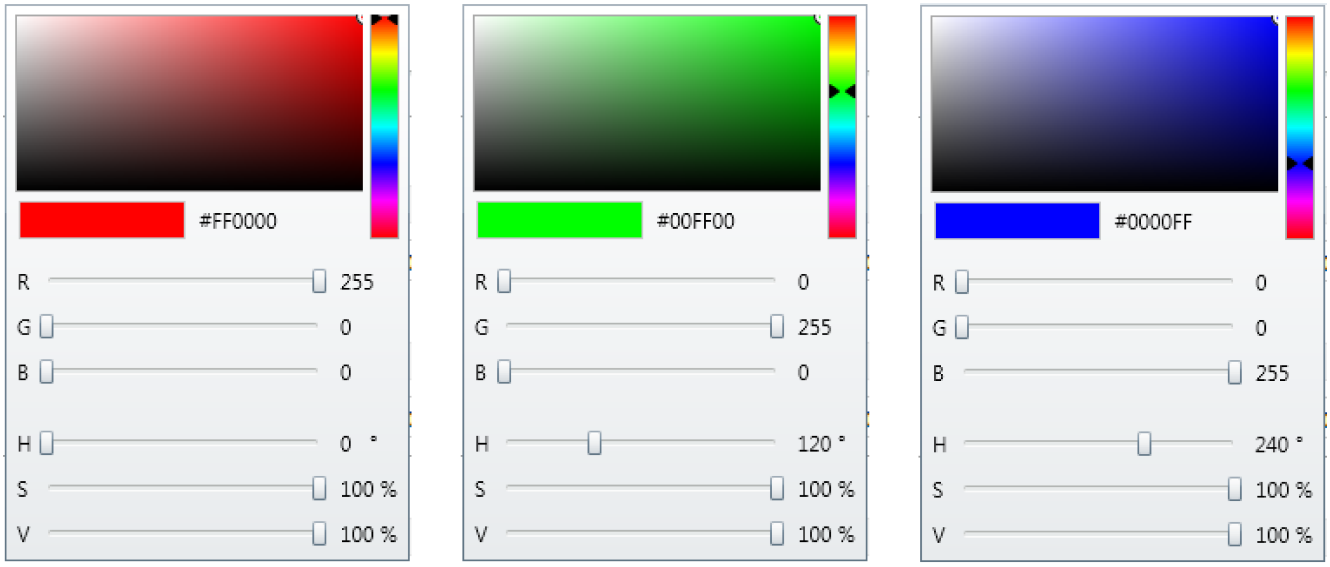

Figure 19: Examples of colour adjustment using the ETS colour picker

Examples of HSV-RGB conversion:

Example	HSV values	RGB values	Colour
1	0°, 100%, 100%	255, 0, 0	Red
2	120°, 100%, 100%	0, 255, 0	Green
3	240°, 100%, 100%	0, 0, 255	Blue
4	360°, 0%, 100%	255, 255, 255	White
5	360°, 0%, 0%	0, 0, 0	Black

i With "Saturation (S) = 0%" and "Brightness (V) = 100%", a change in the colour hue (H) has no effect on the RGB values and thus no effect on the colour (see example 4).

i With "Saturation (S) = 0%" and "Brightness (V) = 0%", a change in the colour hue (H) has no effect on the RGB values and thus no effect on the colour (see example 5).

Colour sequence - Operation of the function

When operating the colour sequence, the device differentiates between dual-area operation and single-area operation. The parameter "Command on pressing" defines the single-area or dual-area operation principle.

Dual-area operation	Single-area operation
Colour sequence in anti-clockwise direction (ON)	Toggle colour sequence (TOGGLE)
Colour sequence in clockwise direction (OFF)	Colour sequence in anti-clockwise direction (TOGGLE)
	Colour sequence in clockwise direction (TOGGLE)

i With dual-area operation, the device transmits a telegram for switching on or off after a brief press, and a colour sequence telegram after a long press.

i With single-area operation, the device transmits ON and OFF telegrams in an alternating pattern ("TOGGLE") for each brief press of the respective button, and a colour sequence telegram for a long actuation.

13.3.2 Brightness adjustment

The brightness adjustment performs a value adjustment of the brightness value (V) in the range from 0 to 100%.

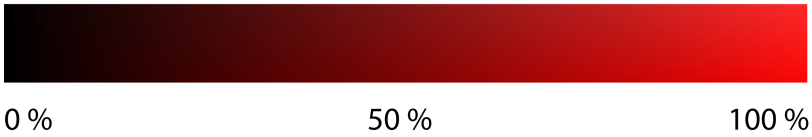

Figure 20: Brightness scale (brightness value V) - example red

The brightness adjustment is realised according to the adjustment direction ("Command on pressing") and the step width ("Increase brightness" or "Reduce brightness") via bus telegrams. When adjusting the brightness, a long press causes the device to cyclically send new values to the bus, which changes the brightness.

i The brightness adjustment due to a long press ends automatically, either when the brightness is increased to 100 per cent or when the brightness is decreased to 0 per cent.

- Colour space HSV and HSVW: The brightness value (V) changes cyclically by the parameterised step width ("Increase brightness" or "Reduce brightness"). The colour hue (H) and the saturation (S) remain unaffected by a brightness adjustment.
- Colour space RGB and RGBW: Depending on the start position at the beginning of the adjustment, the values R, G or B change cyclically.

Brightness adjustment - Colour picker

Using the colour picker of the ETS, the brightness adjustment can be reproduced by adjusting the slider of the V-value between 0% and 100%.

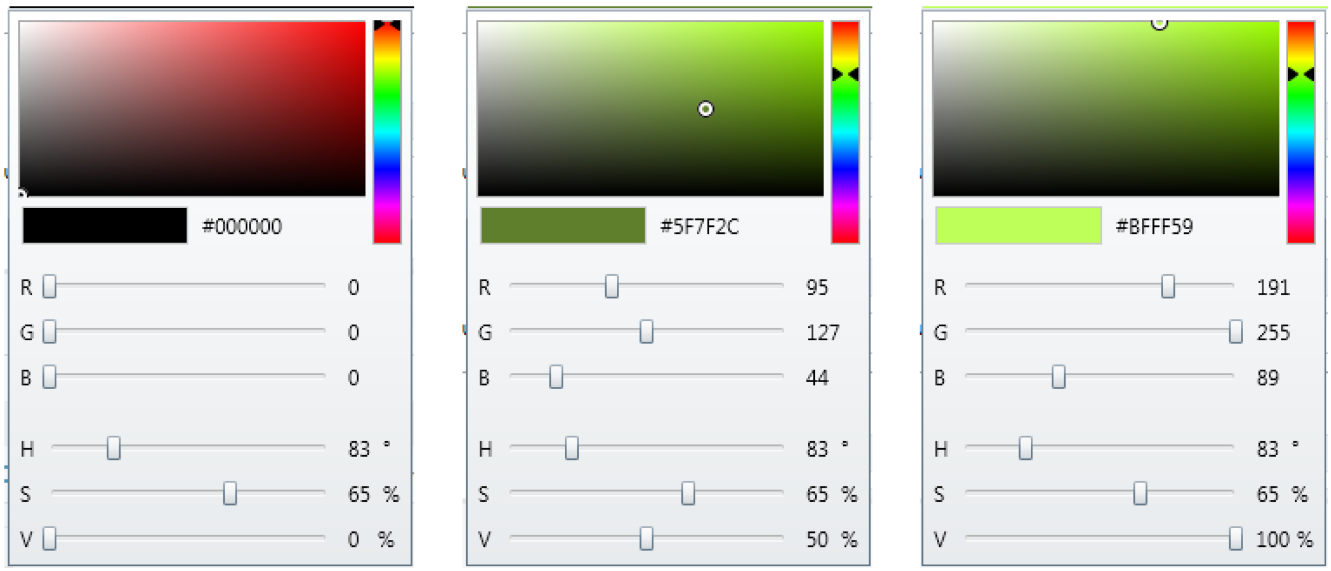

Figure 21: Examples of brightness adjustment using the colour picker of the ETS

Examples of HSV-RGB conversion:

Example	HSV values	RGB values	Colour
1	83°, 65%, 0%	0, 0, 0	Black
2	83°, 65%, 50%	95, 127, 44	Dark green
3	83°, 65%, 100%	191, 255, 89	Light green

i With "Brightness (V) = 0%", a change in the colour hue (H) or the saturation (S) has no effect on the RGB values and thus no effect on the colour (see example 1).

Brightness adjustment - Operating the function

When operating the brightness adjustment, the device differentiates between dual-area operation and single-area operation. The parameter "Command on pressing" defines the single-area or dual-area operation principle.

Dual-area operation	Single-area operation
Brightness adjustment brighter (ON)	Brightness adjustment brighter / darker (TOGGLE)
Brightness adjustment darker (OFF)	Brightness adjustment brighter (TOGGLE)
	Brightness adjustment darker (TOGGLE)

i With dual-area operation, the device transmits a telegram for switching on or off after a brief press, and brightness adjustment telegrams after a long press.

i With single-area operation, the device transmits ON and OFF telegrams in an alternating pattern ("TOGGLE") for each brief press of the button, and telegrams for brightness adjustment for a long actuation.

13.3.3 Table of parameters

Type of colour control	**Colour sequence** Brightness adjustment
This parameter sets whether a colour circle run or a brightness adjustment is performed. Depending on this setting, all further parameters are automatically adjusted. – The colour sequence performs a value adjustment of the colour hue (H) in the range from 0 to 360°. – The brightness adjustment performs a value adjustment of the brightness value (V) in the range from 0 to 100%. This function is unsuitable for combination with DALI operating devices. In this case, the brightness adjustment should be implemented with the function "Dimming and colour temperature" (DPT 3.007).	

Colour space	RGB **RGBW** HSV HSVW
This parameter defines the colour space of the function. With the colour spaces RGB and RGBW, communication can take place via individual objects or via a combination object. With the colour spaces HSV and HSVW, communication takes place via individual objects.	

Communication	Individual objects **Combi object**
Only when the colour space is set to RGB or RGBW, can communication via the bus take place either via individual objects (red, green, blue, white*) or via a combination object (RGBW). The parameter defines input and output objects in the same way. *Only for RGBW	

Value (RGB/HSV)	#000000 ... **#FF0000** ... #FFFFFF
This parameter determines the object values (communication via individual objects) or the object value (communication via combination object) when the button is pressed. The value (RGB/HSV) is configured by means of a colour picker. The W-value is parameterised using a separate slider.	

Value (W)	0 ... 255 or 0 ... 100%
This parameter defines the white value for the object when the button is pressed. When the colour space has been configured to "RGBW" the W-value is set from 0 to 255. When the colour space has been parameterised to "HSVW" the W-value is set between 0 and 100%.	

Command on pressing	No reaction Colour sequence in anti-clockwise direction (ON) Colour sequence in clockwise direction (OFF) Toggle colour sequence (TOGGLE) **Colour sequence in anti-clockwise direction (TOGGLE)** Colour sequence in clockwise direction (TOGGLE)
When the button is actuated briefly, the device sends a switching telegram according to the parameterisation (ON, OFF or TOGGLE). With a long press, the device can either vary the values always in the same direction or it stores the direction of the last adjustment and reverses it on the next button-press. The device adjusts the values in the same direction with the options: – Colour sequence in anti-clockwise direction (ON) – Colour sequence in clockwise direction (OFF) – Colour sequence in anti-clockwise direction (TOGGLE) – Colour sequence in clockwise direction (TOGGLE) The device inverts the adjustment direction with the following option: – Toggle colour sequence (TOGGLE) This parameter is only visible if the "Type of colour control = Colour sequence" has been parameterised	

Command on pressing	No reaction Brightness adjustment brighter (ON) Brightness adjustment darker (OFF) Brightness adjustment brighter / darker (TOGGLE) **Brightness adjustment brighter (TOGGLE)** Brightness adjustment darker (TOGGLE)
When the button is actuated briefly, the device sends a switching telegram according to the parameterisation (ON, OFF or TOGGLE). With a long press, the device can either vary the values always in the same direction or it stores the direction of the last adjustment and reverses it on the next button-press. The device adjusts the values in the same direction with the options: – Brightness adjustment brighter (ON) – Brightness adjustment darker (OFF) – Brightness adjustment brighter (TOGGLE) – Brightness adjustment darker (TOGGLE) The device inverts the adjustment direction with the following option: – Brightness adjustment brighter / darker (TOGGLE) This parameter is only visible if the "Type of colour control = Brightness adjustment" has been parameterised	

Time between switching and colour sequence	**0** ... 50 s | 100 ... **400** ... 990 ms
This parameter defines how long the button must be pressed for a colour sequence to be started. This parameter is only visible if the "Type of colour control = Colour sequence" has been parameterised	

Time between switching and brightness adjustment	**0** ... 50 s | 100 ... **400** ... 990 ms
This parameter defines how long the button must be pressed for a brightness adjustment to be started. This parameter is only visible if the "Type of colour control = Brightness adjustment" has been parameterised	

Extended settings	Active **Inactive**
When the advanced parameters are activated, the ETS shows the following parameters, depending on the parameter "Type of colour control".	

Start value	same as configured value same as value after last adjustment **same as value from feedback object**

Value adjustment can begin with different starting values.

With "same as configured value": After each long press, the device always starts with the value configured in the ETS.

With "same as value after last adjustment": After a long press, the device starts with the value transmitted by itself or by another device with this group address as the last value.

With "same as value from feedback object": After each long press, the device starts with the value that it or another device with this group address transmitted as the last value.

i The start value of the value adjustment is different for both buttons of a rocker if the setting is "same as value after last adjustment". If the value adjustment works for both buttons of a rocker and the last rocker adjustment is to be taken into account, the setting "same as value from feedback object" must be configured.

Increment	1° 2° **4°** 5° 10° 20° 25° 30° 50° 60°

This parameter defines the step width with which the device adjusts the colour when a button is pressed for a long time and telegram repetition is activated.

In a value adjustment, the device determines the new telegram value from the previous value and the preset step width. If the value falls below the lower limit of the adjustment range or if it exceeds the upper limit, the sensor adapts the step width of the last step automatically.

This parameter is only visible if the "Type of colour control = Colour sequence" has been parameterised

Increase brightness	1% **2%** 3% 4% 5% 6% 7% 8% 9% 10%
This parameter defines the step width with which the device increases the brightness when a button is pressed for a long time and telegram repetition is activated. In a value adjustment, the device determines the new telegram value from the previous value and the preset step width. If the value falls below the lower limit of the adjustment range or if it exceeds the upper limit, the sensor adapts the step width of the last step automatically. This parameter is only visible if the "Type of colour control = Brightness adjustment" has been parameterised	

Reduce brightness	1% **2%** 3% 4% 5% 6% 7% 8% 9% 10%
This parameter defines the step width with which the device reduces the brightness when a button is pressed for a long time and telegram repetition is activated. In a value adjustment, the device determines the new telegram value from the previous value and the preset step width. If the value falls below the lower limit of the adjustment range or if it exceeds the upper limit, the sensor adapts the step width of the last step automatically. This parameter is only visible if the "Type of colour control = Brightness adjustment" has been parameterised	

Telegram repetition	**Active**
The telegram repetition for colour control is always active. The device cyclically sends operating telegrams (in the parameterised step width) to the bus if the button is pressed for a long time.	

Time between two telegrams	**0.5 s** 1 s 2 s 5 s 10 s
This parameter determines how fast the telegrams for operating the colour sequence are automatically repeated in the telegram repetition mode. This parameter is only visible if "Type of colour control = Colour sequence" and "Telegram repetition = active" have been parameterised!	

Time between two telegrams	**200 ms** 300 ms 400 ms 500 ms 750 ms 1 s 2 s
This parameter determines how fast the telegrams for operating the brightness adjustment are automatically repeated in the telegram repetition mode. This parameter is only visible if "Type of colour control = Brightness adjustment" and "Telegram repetition = active" have been parameterised!	

13.3.4 Object list

The following communication objects are available for the individual buttons or rockers, depending on the set operating concept. The name of the object corresponds to the selection of the operating concept and can be specified by the parameter "Name of ..." parameter.

Function	Name	Type	DPT	Flag
Switching	Button/rocker *n* - output	1-bit	1,001	C, -, -, T, -
1-bit object for transmission of switching telegrams (ON, OFF).				

Function	Name	Type	DPT	Flag
Switching feedback	Button/rocker *n* - input	1-bit	1,001	C, -, W, -, U
1-bit object for receiving feedback telegrams (ON, OFF).				

Function	Name	Type	DPT	Flag
Colour value RGB	Button/rocker *n* - output	3-byte	232,600	C, -, -, T, -
3-byte object for transmitting the RGB colour values. This object is only visible with "Colour space = RGB" and "Communication = Combi object".				

Function	Name	Type	DPT	Flag
Colour value RGBW	Button/rocker *n* - output	6-byte	251,600	C, -, -, T, -
6-byte object for transmitting the RGBW colour values. This object is only visible with "Colour space = RGBW" and "Communication = Combi object"				

Function	Name	Type	DPT	Flag
Colour value Red	Button/rocker *n* - output	1-byte	5,001	C, -, -, T, -
1-byte object for transmitting the red colour value. This object is only visible with "Colour space = RGB or RGBW" and "Communication = Individual objects".				

Function	Name	Type	DPT	Flag
Colour hue (H)	Button/rocker *n* - output	1-byte	5,003	C, -, -, T, -
1-byte object for transmitting the colour hue. This object is only visible with "Colour space = HSV or HSVW".				

Function	Name	Type	DPT	Flag
Colour value Green	Button/rocker *n* - output	1-byte	5,001	C, -, -, T, -
1-byte object for transmitting the green colour value. This object is only visible with "Colour space = RGB or RGBW" and "Communication = Individual objects".				

Function	Name	Type	DPT	Flag
Saturation (S)	Button/rocker *n* - output	1-byte	5,001	C, -, -, T, -
1-byte object for transmitting the saturation. This object is only visible with "Colour space = HSV or HSVW".				

Function	Name	Type	DPT	Flag
Colour value Blue	Button/rocker *n* - output	1-byte	5,001	C, -, -, T, -
1-byte object for transmitting the blue colour value. This object is only visible with "Colour space = RGB or RGBW" and "Communication = Individual objects"				

Function	Name	Type	DPT	Flag
Brightness (V)	Button/rocker *n* - output	1-byte	5,001	C, -, -, T, -
1-byte object for transmitting the brightness value. This object is only visible with "Colour space = HSV or HSVW".				

Function	Name	Type	DPT	Flag
Colour value White	Button/rocker *n* - output	1-byte	5,001	C, -, -, T, -
1-byte object for transmitting the white colour value. This object is only visible with "Colour space = RGBW" and "Communication = Individual objects"				

Function	Name	Type	DPT	Flag
White value (W)	Button/rocker *n* - output	1-byte	5,001	C, -, -, T, -
1-byte object for transmitting the white level. This object is only visible with "Colour space = HSVW".				

Function	Name	Type	DPT	Flag
Colour value RGB feedback	Button/rocker *n* - input	3-byte	232,600	C, -, W, -, U
3-byte object for receiving feedback telegrams (RGB colour values). This object is only visible with "Colour space = RGB" and "Communication = Combi object"				

Function	Name	Type	DPT	Flag
Colour value RGBW feedback	Button/rocker *n* - input	6-byte	251,600	C, -, W, -, U
6-byte object for receiving feedback telegrams (RGBW colour values). This object is only visible with "Colour space = RGBW" and "Communication = Combi object"				

Function	Name	Type	DPT	Flag
Colour value Red feedback	Button/rocker *n* - input	1-byte	5,001	C, -, W, -, U
1-byte object for receiving feedback telegrams (red colour value). This object is only visible with "Colour space = RGB or RGBW" and "Communication = Individual objects"				

Function	Name	Type	DPT	Flag
Colour hue (H) feedback	Button/rocker *n* - input	1-byte	5,003	C, -, W, -, U
1-byte object for receiving feedback telegrams (colour hue H). This object is only visible with "Colour space = HSV or HSVW".				

Function	Name	Type	DPT	Flag
Colour value Green feedback	Button/rocker *n* - input	1-byte	5,001	C, -, W, -, U
1-byte object for receiving feedback telegrams (green colour value). This object is only visible with "Colour space = RGB or RGBW" and "Communication = Individual objects"				

Function	Name	Type	DPT	Flag
Saturation (S) feedback	Button/rocker *n* - input	1-byte	5,001	C, -, W, -, U
1-byte object for receiving feedback telegrams (saturation S). This object is only visible with "Colour space = HSV or HSVW".				

Function	Name	Type	DPT	Flag
Colour value Blue feedback	Button/rocker *n* - input	1-byte	5,001	C, -, W, -, U
1-byte object for receiving feedback telegrams (blue colour value). This object is only visible with "Colour space = RGB or RGBW" and "Communication = Individual objects"				

Function	Name	Type	DPT	Flag
Brightness (V) feedback	Button/rocker *n* - input	1-byte	5,001	C, -, W, -, U
1-byte object for receiving feedback telegrams (brightness value V). This object is only visible with "Colour space = HSV or HSVW".				

Function	Name	Type	DPT	Flag
Colour value White feedback	Button/rocker *n* - input	1-byte	5,001	C, -, W, -, U
1-byte object for receiving feedback telegrams (white colour value). This object is only visible with "Colour space = RGBW" and "Communication = Individual objects"				

Function	Name	Type	DPT	Flag
White level (W) feed-back	Button/rocker *n* - input	1-byte	5,001	C, -, W, -, U
1-byte object for receiving feedback telegrams (white value W). This object is only visible with "Colour space = HSVW".				

13.4 Shading

For each rocker or each button with the function set to "Shading", the ETS indicates the two 1-bit objects "Short-time operation" and "Long-time operation".

The "Shading" function distinguishes between dual-area operation (UP, DOWN) and single-area operation (TOGGLE). The parameter "Command on pressing" defines the single-area or double-area blind function.

With an operating element as a rocker, the double-surface Venetian blind function is preset. This means that the push-button sensor transmits a telegram for a upward movement, for example after actuation of the left actuation point and a telegram for a downward movement after an actuation of the right actuation point.
In the case of an operating element as buttons, the device is preprogrammed for single-surface Venetian blind function. In this case, the push-button sensor alternates between the directions of the long time telegram (TOGGLE) on each long actuation of the sensor. Several short time telegrams in succession have the same direction.

If the actuator can be controlled from several sensors, a faultless single-area operation requires that the long time objects of the push-button sensors are interlinked. The push-button sensor would otherwise not be able to detect that the actuator has been addressed from another sensor, in which case it would have to be actuated twice during the next use in order to produce the desired reaction.

Operating concepts for the shading function

For the control of Venetian blind, roller shutter, awning or similar drives, the push-button sensor supports four operation concepts in which the telegrams are transmitted in different time sequences. The push-button sensor can therefore be used to operate a wide variety of drive configurations.
The different operating concepts are described in detail in the following chapter.

<u>Operating concept "short – long – short":</u>
In the operating concept "short – long – short", the push-button sensor shows the following behaviour:

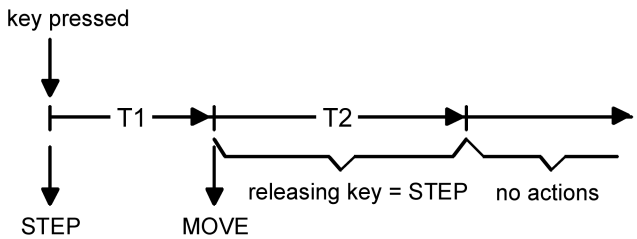

Figure 22: Operating concept "short – long – short"

– Immediately on pressing the button, the push-button sensor transmits a short time telegram. Pressing the button stops a running drive and starts time T1 ("time between short time and long time command"). No other telegram will be transmitted, if the key is released within T1. This short time serves the purpose of stopping a continuous movement.

The "time between short and long-time command" in the push-button sensor should be selected shorter than the short-time operation of the actuator to prevent a jerky movement of the Venetian blind.

– If the button is kept depressed longer than T1, the push-button transmits a long time telegram after the end of T1 for starting up the drive and time T2 ("slat adjusting time") is started.
– If the button is released within the slat adjusting time, the push-button sensor sends another short time telegram. This function is used for adjusting the slats of a Venetian blind. The function permits stopping the slats in any position during their rotation.
  The "slat adjusting time" should be chosen as required by the drive for a complete rotation of the slats. If the "slat adjusting time" is selected longer than the complete running time of the drive, a push button function is possible as well. This means that the drive is active only when the button is kept depressed.
– If the button is kept depressed longer than T2, the push-button sensor transmits no further telegram. The drive remains on until the end position is reached.

Operating concept "long – short":
In the operating concept "short – long – short", the push-button sensor shows the following behaviour:

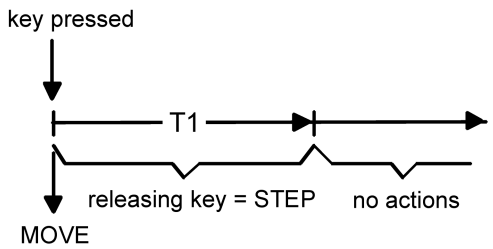

Figure 23: Operating concept "long – short"

– Immediately on pressing the button, the push-button sensor transmits a long time telegram. The drive begins to move and time T1 ("slat adjusting time") is started.
– If the button is released within the slat adjusting time, the push-button sensor transmits a short time telegram. This function is used for adjusting the slats of a Venetian blind. The function permits stopping the slats in any position during their rotation.
  The "slat adjusting time" should be chosen as required by the drive for a complete rotation of the slats. If the "slat adjusting time" is selected longer than the complete running time of the drive, a push button function is possible as well. This means that the drive is active only when the button is kept depressed.
– If the button is kept depressed longer than T1, the push-button sensor transmits no further telegram. The drive remains on until the end position is reached.

Operating concept "short – long":
In the operating concept "short – long", the push-button sensor shows the following behaviour:

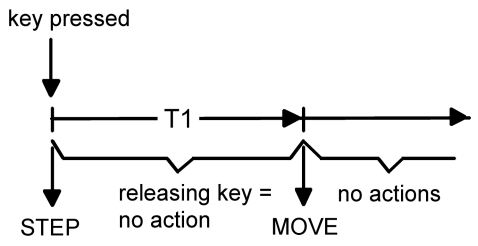

Figure 24: Operating concept "short – long"

- Immediately on pressing the button, the push-button sensor transmits a short time telegram. Pressing the button stops a running drive and starts time T1 ("time between short time and long time command"). No other telegram will be transmitted, if the key is released within T1. This short time serves the purpose of stopping a continuous movement.
  The "time between short and long-time command" in the push-button sensor should be selected shorter than the short-time operation of the actuator to prevent a jerky movement of the Venetian blind.
- If the button is kept depressed longer than T1, the push-button transmits a long time telegram after the end of T1 for starting the drive.
- No further telegram is transmitted when the push-button is released. The drive remains on until the end position is reached.

Operating concept "long – short or short":
In the operating concept "long – short or short", the push-button sensor shows the following behaviour:

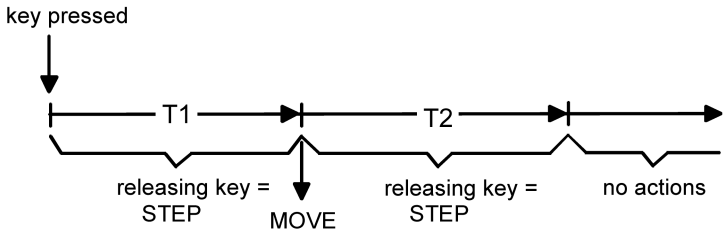

Figure 25: Operating concept "long – short or short"

- Immediately on pressing the button, the push-button sensor starts time T1 ("time between short and long time command") and waits. If the button is released again before T1 has elapsed, the push-button sensor transmits a short time telegram. This telegram can be used to stop a running drive. A stationary drive rotates the slats by one level.
- If the button is kept depressed after T1 has elapsed, the push-button sensor transmits a long time telegram and starts time T2 ("slat adjusting time").
- If the button is released within T2, the push-button sensor sends another short time telegram. This function is used for adjusting the slats of a Venetian blind. The function permits stopping the slats in any position during their rotation. The "slat adjusting time" should be chosen as required by the drive for a complete rotation of the slats. If the "slat adjusting time" is selected longer than the complete running time of the drive, a push button function is possible as well. This means that the drive is active only when the button is kept depressed.

– If the button is kept depressed longer than T2, the push-button sensor transmits no further telegram. The drive remains on until the end position is reached.

13.4.1 Table of parameters

The following parameters are available for the individual buttons or for the left and right sides of the rockers, depending on the set operating concept. The default settings change in accordance with the set operating concept.

Command on pressing (Only for "button function" operating concept)	UP DOWN **TOGGLE**
This parameter defines the running direction of a drive after a button actuation. If the setting is "TOGGLE", the direction is changed after each long time command. If several push-buttons are to control the same drive, the long time objects of the push-buttons must be interlinked for a correct change of the running direction.	

Command on pressing (For "rocker function" operating concept and "standard installation position")	**Left rocker: UP / Right rocker: DOWN** Left rocker: DOWN / Right rocker: UP Left rocker: TOGGLE / Right rocker: TOGGLE
This parameter defines the running direction of a drive after a rocker actuation. If the setting is "TOGGLE", the direction is changed after each long time command. If several push-buttons are to control the same drive, the long time objects of the push-buttons must be interlinked for a correct change of the running direction.	

Command on pressing (For "rocker function" operating concept and "turned by -90°" installation position)	**Rocker top: UP / Rocker bottom: DOWN** Rocker top: DOWN / Rocker bottom: UP Rocker top: TOGGLE / Rocker bottom: TOGGLE
This parameter defines the running direction of a drive after a rocker actuation. If the setting is "TOGGLE", the direction is changed after each long time command. If several push-buttons are to control the same drive, the long time objects of the push-buttons must be interlinked for a correct change of the running direction.	

Operating concept	**short – long – short** Long – short Short – long Long – short or short
For shading control, four different operating concepts can be selected. For these concepts, the ETS shows further parameters.	

Time between short-time and long-time command	100 … **400** … 300000
This parameter sets the time in 100 millisecond increments after which the long-time operation will be evaluated on pressing the operating element. This parameter is not visible with "Operating concept = long – short"!	

Slat adjusting time	0 … **500** … 300000
This is used to set the time in 100 millimetre increments during which a transmitted MOVE telegram can be terminated by releasing the operating element (STEP). This function serves to adjust the slats of a venetian blind. This parameter is not visible with "Operating concept = short - long"!	

13.4.2 Object list

The following communication objects are available for the individual buttons or rockers, depending on the set operating concept. The object name corresponds to the selection for the operating concept (button or rocker). The name of the object can be specified by the parameter "Name of ..." parameter.

Function	Name	Type	DPT	Flag
Short-time operation	Button/rocker *n* - output	1-bit	1,007	C, -, -, T, -
1-bit object for the transmission of telegrams with which a venetian blind or shutter drive motor can be stopped or with which the blind slats can be adjusted by short time operation.				

Function	Name	Type	DPT	Flag
Long-time operation	Button/rocker *n* - output	1-bit	1,008	C, -, W, T, -
1-bit object for the transmission of telegrams with which a venetian blind or shutter drive motor can be can be moved upwards or downwards.				

13.5 Value transmitter

With the "value transmitter" function, the device sends parameterised values to the bus at the press of a button. In case of a rocker function, different values can be configured for both buttons.

Value ranges

The value transmitter knows twelve different value ranges. Depending on the application, the parameters "Function" and "Value range" determine which value range the value transmitter uses:

Function	Functionality	Lower numerical limit	Upper numerical limit
1-byte value transmitter	0...255	0	255
1-byte value transmitter	0...100%	0%	100%
1-byte value transmitter	-128...127	-128	127
1-byte value transmitter	0...255%	0%	255%
2-byte value transmitter	0...65535	0	65535
2-byte value transmitter	-32768...32767	-32768	32767
2-byte value transmitter	Temperature value	0 °C	40 °C
2-byte value transmitter	Brightness value	0 lux	1500 lux
2-byte value transmitter	Colour temperature value	1000 K	10000 K
3-byte value transmitter	Colour value RGB/ HSV	#000000	#FFFFFF
6-byte value transmitter	Colour value RGBW/HSVW	#000000 + 0	#FFFFFF + 255
6-byte value transmitter	Colour temperature value + brightness	1000 K | 0%	10000 K | 100%

For each of these ranges, the value that can be transmitted to the bus for each button actuation is configurable.

13.5.1 1-byte value transmitter

The 1-byte value transmitter is available in the following four variants:

- 0 ... 255
- 0 ... 100%
- -128 ... 127
- 0 ... 255%

For each rocker or button, ETS indicates an object for sending out the parameterised value. On pressing a button, the configured value is transmitted to the bus. In case of a rocker function, different values can be configured for both buttons.

13.5.2 2-byte value transmitter

The 2-byte value transmitter is available in the following five variants:

- 0 ... 65535
- -32768 ... 32767
- Temperature value (0 ... 40 °C)
- Brightness value (0, 50, ..., 1500 lux)
- Colour temperature value (1000, 1100, ..., 10000)

For each rocker or button, ETS indicates an object for sending out the parameterised value. On pressing a button, the configured value is transmitted to the bus. In case of a rocker function, different values can be configured for both buttons.

13.5.3 3-byte value transmitter

The 3-byte value transmitter is available in the following variant:

– Colour value RGB/HSV

For each rocker or button, ETS indicates up to three objects for sending out the parameterised values. The parameterised values are sent to the bus at the touch of a button. In case of a rocker function, different values can be configured for both buttons.

In the parameters, the colour space of this function can be defined. With the colour space RGB, communication can take place via individual objects or via a combination object. With the colour space HSV, communication takes place via individual objects.

The object values to be transmitted are parameterised via a colour picker.

13.5.4 6-byte value transmitter

The 6-byte value transmitter is available in the following two variants:

– Colour value RGBW/HSVW

– Colour temperature value + brightness

For each rocker or button, ETS indicates up to four objects for transmitting the parameterised values. The parameterised values are sent to the bus at the touch of a button. In case of a rocker function, different values can be configured for both buttons.

With the value range "Colour value RGBW/HSVW", the colour space of this function can be defined in the parameters. With the colour space RGBW, communication can take place via individual objects or via a combination object. With the colour space HSVW, communication takes place via individual objects.

The RGB or HSV object values to be transmitted are parameterised via a colour picker. The object value W is parameterised using a separate slider.

With the value range "Colour temperature value + brightness", the object values to be transmitted for colour temperature and brightness as well as a time window are defined in the parameters. The device packs all three pieces of information together in one communication object and sends them to the bus. The receiving actuator converts this information, according to DPT 249.600 and sets the colour temperature and brightness in the parameterised time window.

13.5.5 Table of parameters

The following parameters are available for the individual buttons, depending on the set operating concept. The default settings change in accordance with the set operating concept.

Functionality	no function **1-byte** 2-byte 3-byte 6-byte
The "value transmitter" function distinguishes between 1-byte, 2-byte 3-byte and 6-byte values.	

Value range	**1-byte (0...255)** 1-byte (0...100%) 1-byte (-128...127) 1-byte (0...255%)
The 1-byte value transmitter offers these value ranges for setting. The other parameters and objects of the function are based on the setting of this parameter.	

Value range	**2-byte (0...65535)** 2-byte (-32768...32767) 2-bytes temperature value 2-byte brightness value 2-bytes colour temperature value
The 2-byte value transmitter offers these value ranges for setting. The other parameters and objects of the function are based on the setting of this parameter.	

Value range	**3-bytes colour value RGB/HSV**
The 3-byte value transmitter offers these value ranges for setting. The other parameters and objects of the function are based on the setting of this parameter.	

Colour space	**RGB** HSV
This parameter defines the colour space of the function. With RGB, communication can take place via individual objects or via a combination object. With HSV, communication takes place via individual objects. This parameter is only visible if "Value range = 3-byte colour value RGB/HSV"	

Communication	**Individual objects** Combi object
When the colour space is set to RGB, communication via the bus can take place either via individual objects (red, green, blue) or via a combination object (RGB). This parameter is only visible if "Value range = 3-byte colour value RGB/HSV"	

Value range	**6-bytes colour value RGBW/HSVW** 6-bytes colour temperature value + brightness
The 6-byte value transmitter offers these value ranges for setting. The other parameters and objects of the function are based on the setting of this parameter.	

Colour space	**RGBW** HSVW
This parameter defines the colour space of the function. With RGBW, communication can take place via individual objects or via a combination object. With HSVW, communication takes place via individual objects. This parameter is only visible if "Value range = 6-byte colour value RGBW/HSVW"	

Communication	**Individual objects** Combi object
When the colour space is set to RGBW, communication via the bus can take place either via individual objects (red, green, blue, white) or via a combination object (RGBW). This parameter is only visible if "Value range = 6-byte colour value RGBW/HSVW"	

Value (0…255)	**0**...255
This parameter defines the object value when the button is pressed. This parameter is only visible if "Function = 1-byte" and "Value range = 1-byte (0...255)".	

Value (0…100 %)	**0**...100
This parameter defines the object value when the button is pressed. This parameter is only visible if "Function = 1-byte" and "Value range = 1-byte (0...100%)".	

Value (-128...127)	-128...**0**...127
This parameter defines the object value when the button is pressed. This parameter is only visible if "Function = 1-byte" and "Value range = 1-byte (-128...127)".	

Value (0…255%)	**0**...255
This parameter defines the object value when the button is pressed. This parameter is only visible if "Function = 1-byte" and "Value range = 1-byte (0...255%)".	

Value (0…65535)	**0**...65535
This parameter defines the object value when the button is pressed. This parameter is only visible if "Function = 2-byte" and "Value range = 2-byte (0...65535)".	

Value (-32768…32767)	-32768...**0**...32767
This parameter defines the object value when the button is pressed. This parameter is only visible if "Function = 2-byte" and "Value range = 2-byte (-32768...32767)".	

Temperature value (0...40 °C)	0...**20**...40
This parameter defines the object value when the button is pressed. This parameter is only visible if "Function = 2-byte" and "Value range = 2-byte temperature value".	

Brightness value (0, 50, ..., 1500 lux)	0, 50, ..., **300**, ..., 1500
This parameter defines the object value when the button is pressed. This parameter is only visible if "Function = 2-byte" and "Value range = 2-byte brightness value".	

Colour temperature (1000, 1100, ..., 10000 K)	1000, 1100, ..., **2700**, ..., 10000
This parameter defines the object value when the button is pressed. This parameter is only visible if "Function = 2-byte" and "Value range = 2-byte temperature value".	

Value (RGB/HSV)	#000000 ... **#FFFFFF**
This parameter is used to determine the object values of the following output objects when the button is pressed: – "Colour value transmitter red", "Colour value transmitter green", "Colour value transmitter blue" or – "Colour value transmitter RGB", "Colour value transmitter **RGB**W" or – "Colour hue (H)", "Saturation (S)", "Brightness (V)" The parameter is visible with "Function = 3-byte RGB/HSV" or "Function = 6-byte RGBW/HSVW". The value (RGB/HSV) is configured by means of a colour picker. With the "6-byte RGBW / HSVW" function, the W value is configured using a separate slider.	

Value (W)	**0** ... 255
This parameter is used to determine the object values of the following output objects when the button is pressed: – "Colour value transmitter White" or – "Colour value transmitter RGB**W**" Visible only if "Function = 6-byte RGBW/HSVW" and "Colour space = RGBW".	

Value (W)	**0** ... 100 %
This parameter is used to determine the object values of the following output object when the button is pressed: – White level (W) Visible only if "Function = 6-byte RGBW/HSVW" and "Colour space = HSVW".	

Colour temperature (1000, 1100, ..., 10000 K)	1000, 1100, ..., **2700**, ..., 10000
This parameter determines the colour temperature of the object value when the button is pressed. This parameter is only visible if "Function = 6-byte" and "Value range = 6-byte temperature value + brightness".	

Brightness	**0** ... 100 %
This parameter determines the brightness of the object value when the button is pressed. This parameter is only visible if "Function = 6-byte" and "Value range = 6-byte temperature value + brightness".	

Time window	0 ... 100 min | 0 ... **1** ... 59 s | 0 ... 900 ms
This parameter determines the time period in which the actuator adjusts the colour temperature and brightness after the button has been pressed. This parameter is only visible if "Function = 6-byte" and "Value range = 6-byte temperature value + brightness".	

13.5.6 Object list

The following communication objects are available for the individual buttons or rockers, depending on the set operating concept. The name of the object corresponds to the selection of the operating concept and can be specified by the parameter "Name of ..." parameter.

Function	Name	Type	DPT	Flag
Value transmitter 0...255	Button/rocker *n* - output	1-byte	5,010	C, -, -, T, -
1-byte object for the transmission of values from 0 to 255. These objects are only visible when: – "Function = 1-bytes" and – "Value range =1-bytes (0...255)"				

Function	Name	Type	DPT	Flag
Value transmitter 0… 100 %	Button/rocker *n* - output	1-byte	5,001	C, -, -, T, -
1-byte object for the transmission of values from 0 to 100%. These objects are only visible when: – "Function = 1-bytes" and – "Value range = 1-byte (0...100%)"				

Function	Name	Type	DPT	Flag
Value transmitter -128...127	Button/rocker *n* - output	1-byte	6,010	C, -, -, T, -
1-byte object for the transmission of values from -128 to 127. These objects are only visible when: – "Function = 1-bytes" and – "Value range =1-bytes (-128...127)"				

Function	Name	Type	DPT	Flag
Value transmitter 0… 255 %	Button/rocker *n* - output	1-byte	5,004	C, -, -, T, -
1-byte object for the transmission of values from 0 to 255%. These objects are only visible when: – "Function = 1-bytes" and – "Value range = 1-byte (0...255%)"				

Function	Name	Type	DPT	Flag
Value transmitter 0...65535	Button/rocker *n* - output	2-byte	7,001	C, -, -, T, -
2-byte object for the transmission of values from 0 to 65535. These objects are only visible when: – "Function = 2-bytes" and – "Value range =2-bytes (0...65535)"				

Function	Name	Type	DPT	Flag
Value transmitter -32768...32767	Button/rocker *n* - output	2-byte	8,001	C, -, -, T, -
2-byte object for the transmission of values from -32768 to 32767. These objects are only visible when: – "Function = 2-bytes" and – "Value range =2-bytes (-32768...32767)"				

Function	Name	Type	DPT	Flag
Temperature value transmitter	Button/rocker *n* - output	2-byte	9,001	C, -, -, T, -
2-byte object for transmitting temperature values from 0 to 40 °C. These objects are only visible when: – "Function = 2-bytes" and – "Value range = 2-byte temperature value"				

Function	Name	Type	DPT	Flag
Brightness value transmitter	Button/rocker *n* - output	2-byte	9,004	C, -, -, T, -
2-byte object for transmitting brightness values from 0 to 1500 Lux. These objects are only visible when: – "Function = 2-bytes" and – "Value range = 2-byte brightness value"				

Function	Name	Type	DPT	Flag
Colour temperature value transmitter	Button/rocker *n* - output	2-byte	7,600	C, -, -, T, -
2-byte object for transmitting colour temperature values from 1000 to 10000 Kelvin. These objects are only visible when: – "Function = 2-bytes" and – "Value range = 2-byte colour temperature value"				

Function	Name	Type	DPT	Flag
Colour value transmitter RGB	Button/rocker *n* - output	3-byte	232,600	C, -, -, T, -

3-byte object for transmitting the colour information red, green and blue in one communication object.

These objects are only visible when:

- "Function = 3-byte",
- "Value range = 3-byte colour value RGB/HSV",
- "Colour space = RGB" and
- "Communication = Combi object"

Function	Name	Type	DPT	Flag
Colour value transmitter RGBW	Button/rocker *n* - output	6-byte	251,600	C, -, -, T, -

6-byte object for sending the colour information red, green, blue and white in one communication object.

These objects are only visible when:

- "Function = 6-byte",
- "Value range = 6-byte colour value RGBW/HSVW",
- "Colour space = RGBW" and
- "Communication = Combi object"

Function	Name	Type	DPT	Flag
Colour value transmitter Red	Button/rocker *n* - output	1-byte	5,001	C, -, -, T, -

1-byte object for transmitting the red colour value from 0 to 100 per cent.

These objects are only visible when:

- "Function = 3-byte or 6-byte",
- "Value range = 3-byte colour value RGB/HSV or 6-byte colour value RGBW/HSVW",
- "Colour space = RGB or RGBW" and
- "Communication = Individual objects"

Function	Name	Type	DPT	Flag
Colour value transmitter Green	Button/rocker *n* - output	1-byte	5,001	C, -, -, T, -

1-byte object for transmitting the green colour value from 0 to 100 per cent.

These objects are only visible when:

- "Function = 3-byte or 6-byte",
- "Value range = 3-byte colour value RGB/HSV or 6-byte colour value RGBW/HSVW",
- "Colour space = RGB or RGBW" and
- "Communication = Individual objects"

Function	Name	Type	DPT	Flag
Colour value transmitter Blue	Button/rocker *n* - output	1-byte	5,001	C, -, -, T, -

1-byte object for transmitting the blue colour value from 0 to 100 per cent.

These objects are only visible when:

- "Function = 3-byte or 6-byte",
- "Value range = 3-byte colour value RGB/HSV or 6-byte colour value RGBW/HSVW",
- "Colour space = RGB or RGBW" and
- "Communication = Individual objects"

Function	Name	Type	DPT	Flag
Colour value transmitter White	Button/rocker *n* - output	1-byte	5,001	C, -, -, T, -

1-byte object for transmitting the white colour value from 0 to 100 per cent.

These objects are only visible when:

- "Function = 6-byte",
- "Value range = 6-byte colour value RGBW/HSVW",
- "Colour space = RGBW" and
- "Communication = Individual objects"

Function	Name	Type	DPT	Flag
Colour hue (H)	Button/rocker *n* - output	1-byte	5,003	C, -, -, T, -

1-byte object for sending the colour hue (H) from 0 ... 360°.

These objects are only visible when:

- "Function = 3-byte or 6-byte",
- "Value range = 3-byte colour value RGB/HSV or 6-byte colour value RGBW/HSVW" and
- "Colour space = HSV or HSVW"

Function	Name	Type	DPT	Flag
Saturation (S)	Button/rocker *n* - output	1-byte	5,001	C, -, -, T, -
1-byte object for transmitting the saturation (S) from 0 to 100 per cent. These objects are only visible when: – "Function = 3-byte or 6-byte", – "Value range = 3-byte colour value RGB/HSV or 6-byte colour value RGBW/HSVW" and – "Colour space = HSV or HSVW"				

Function	Name	Type	DPT	Flag
Brightness (V)	Button/rocker *n* - output	1-byte	5,001	C, -, -, T, -
1-byte object for transmitting the brightness (V) from 0 to 100 per cent. These objects are only visible when: – "Function = 3-byte or 6-byte", – "Value range = 3-byte colour value RGB/HSV or 6-byte colour value RGBW/HSVW" and – "Colour space = HSV or HSVW"				

Function	Name	Type	DPT	Flag
White value (W)	Button/rocker *n* - output	1-byte	5,001	C, -, -, T, -
1-byte object for transmitting the white value (W) from 0 to 100 per cent. These objects are only visible when: – "Function = 6-byte", – "Value range = 6-byte colour value RGBW/HSVW" and – "Colour space = HSVW"				

Function	Name	Type	DPT	Flag
Colour temperature value transmitter + brightness	Button/rocker *n* - output	6-byte	249,600	C, -, -, T, -
6-byte object for sending the time window, colour temperature and brightness. These objects are only visible when: – "Function = 6-bytes" and – "Value range = 6-byte colour temperature value + brightness"				

13.6 Scene extension

For each rocker or button whose function is set to "scene extension unit", the recall of an external scene (1...64) or an internal scene (1...8) can be parameterised.

The internal scene recall works when the scene function is enabled (parameter page "General -> Basic settings").

For each rocker or button whose function is set to "scene extension unit", the ETS shows the parameters "short button actuation" and "long button actuation".

In the function as scene extension unit, the device can either call up scenes or toggle scenes with a short press of a button.

Depending on the parameterised scene recall, the scene extension unit either works with one of the eight device-internal scenes or the device sends preset scene numbers (1...64) to the bus via the "Scene extension unit - scene number" communication object. This makes it possible to call or switch over scenes stored in other devices.

Setting options for short button press:

- Call up scene: Calls up an internal scene (1...8) or an external scene (1...64)
- Toggle scene: Toggle between the two to eight scene numbers entered each time a button is pressed briefly.

Setting options for long button press for "Short button press = call up scene":

- No reaction: A long button-press has no further or additional effect.
- Storage function: A storage command is generated by a button actuation for more than five seconds. In the scene extension unit function, a storage telegram is in this case transmitted to the bus. The internal scene is saved and the internal scene control module will then request the current scene values for the actuator groups used from the bus.

Setting option for long button press for "Scene recall = external" and "Short button press = toggle scene":

- No reaction: A long button-press has no further or additional effect.

  No reaction
- Storage function: A storage command is generated by a button actuation for more than five seconds. In the scene extension unit function, a storage telegram is in this case transmitted to the bus.
- Dimming function: A button actuation that is longer than the parameterised "Time between scene recall and dimming" causes the parameterised dimming function to be executed via individual objects or via a collective object.

With the parameter setting "Long button press = memory function", an actuation between one and five seconds is discarded as invalid.

With the parameter setting "Long button press = dimming function", an actuation between one second and the parameterised "Time between scene recall and dimming" is rejected as invalid.

13.6.1 Table of parameters

The following parameters are available for the individual buttons, depending on the set operating concept. The default settings change in accordance with the set operating concept.

Delay scene	**external** Internal
The device provides the scene extension unit functions with the "external" option and the retrieval of an internal scene with the "internal" option. i The enabled scene function on the "General -> Basic settings" parameter page is a prerequisite for calling up an internal scene.	

Short button operation	**Recall scene** Scene toggling
This parameter defines the functionality of the scene extension unit during a short press of the button. A short press of the button is less than one second. Recall scene with "Scene recall = external": When a scene is recalled, the device sends a telegram with the respective scene number via the "Scene extension unit" object. Call up scene with "Scene recall = internal": When a scene is recalled, the device calls up the internal scene. Scene toggling with "Scene recall = external": Each time a new button is pressed, the device sends a telegram with the next scene number via the "Scene extension unit" object. The scenes are switched through one after the other. The number of scenes can be parameterised. Scene toggle for "Scene recall = internal": Each time a new button is pressed, the device recalls the next internal scene. The scenes are switched through one after the other. The number of scenes can be parameterised.	

Toggle direction	**Next scene** Previous scene
With "Short button press = toggle scene", the scenes are switched through one after the other. Next scene: Switching through the scenes starts at scene 1. The direction of switching through is according to the number of scenes from scene 1 to scene *n*. Previous scene: Switching through the scenes starts at scene *n*. The direction of switching through is according to the number of scenes from scene *n* to scene 1. i With "Button function", the toggle direction is preset to "Next scene".	

Long button operation	**No reaction** Memory function Dimming functions
This parameter defines the functionality of the scene extension unit during a long press of the button. With activated storage function, the device transmits a telegram with the respective scene number via the extension object of the button. When the dimming function is activated, the device performs the parameterised dimming function via individual objects or via a collective object. Additional dimming parameters are displayed. i The "Dimming function" selection option is available for "Scene recall = external" and "Short press = toggle scene".	

Scene number	**1**...64
In accordance with the KNX standard, objects with data type 18.001 "Scene Control" can retrieve or store up to 64 scenes by their numbers. The parameter defines the scene number to be transmitted when the button is pressed. i This parameter is available for "Scene recall = external" and "Short press = recall scene".	

Scene number	**1**...8
In accordance with the KNX standard, objects with data type 18.001 "Scene Control" can retrieve or store up to 8 internal scenes by their numbers. The parameter defines the scene number to be transmitted when the button is pressed. i This parameter is available for "Scene recall = internal" and "Short press = recall scene".	

Number of scenes	**2**...8
The number of scenes can be parameterised for scene toggling. The scenes are switched through during operation according to this setting. The scene configuration in the parameters automatically adapts to the number of scenes.	

Number of scenes can be changed via object	Active **Inactive**
The parameterised number of scenes can be changed via the "Scene extension unit - Number of scenes" communication object if this parameter is set to active. The parameterised number of scenes cannot be changed if this parameter is set to inactive. i When active, the scene numbers and the colours of the status LED for scenes 1 to 8 are fixed in the scene configuration.	

Overwrite the number during ETS programming operation	Active Inactive
In the event that the number of scenes can be changed via the "Scene extension unit - Number of scenes" communication object, this parameter determines which value of the number is valid after an ETS programming operation. With Active, the value parameterised in the ETS applies after an ETS programming operation. If Inactive, the last value specified at running time via object applies after an ETS programming operation.	

Scene configuration

The scene number and the colours of the status LED are configured in the Scene configuration table.

Depending on the previously parameterised number of scenes, the scene configuration offers 2 to 8 scenes for configuration.

In accordance with the KNX standard, objects with data type 18.001 "Scene Control" can retrieve or store up to 64 scenes by their numbers. The scene numbers to be sent when a button is pressed during scene toggling are defined in the scene configuration.

With "Scene recall = external", a scene number from 1 to 64 can be parameterised for each scene.

With "Scene recall = internal", a scene number from 1 to 8 can be parameterised for each scene.

i Each scene should be assigned a unique number.

i If the number of scenes can be changed via KNX, the scene numbers and the corresponding colours of the status LED are fixed.

Number	1...64
These parameters define the scene numbers from scene 1 to scene 8 if external scene recall is configured.	

Number	1...8
These parameters define the scene numbers from scene 1 to scene 8 if the internal scene recall is configured.	

Colour of the status LED	Off Red Green Blue Yellow Cyan Orange Violet White
These parameters define the colour of the status LED from scene 1 to scene 8 in which the status LEDs light up if the function of the status LED is configured to "scene extension unit indication with toggle function".	

Time until restart for scene 1	0 min | 0 s ... **0 min | 10 s** ...4 min | 0 s
When toggling a scene, a timer starts internally each time a button is pressed. A countdown up to a maximum of 4 minutes can be parameterised. The next scene is called up each time the button is pressed during the period of the parametrised time until scene 1 is restarted. When a button is pressed after the parametrised time until restart at scene 1 has elapsed, scene toggling restarts.	

Transmission delay	0 ms 200 ms 300 ms **400 ms** 500 ms 750 ms 1000 ms 2000 ms
The time parametrised here in milliseconds is the transmission delay after a button is pressed. After a button is pressed, the device waits for the parametrised transmission delay and only calls up the scene number after the delay time has elapsed. The transmission delay can be parametrised as an option.	

Illumination length	**Like light duration for button-actuation display** as time until restart for scene 1 permanently ON
This parameter defines the light duration of the status LED when it executes the "scene extension unit indication with toggle function" function. With "as light duration for actuation display", the status LED lights up for 1 to 5 seconds in the configured colour according to the parameter setting of the "Light duration for actuation display" parameter (parameter page "General -> Basic settings"). With "as time until restart for scene 1", the status LED lights up for a maximum of 4 minutes in the parametrised colour according to the parameter setting of the "Time until restart for scene 1" parameter (parameter page "Button *n* -> Button *n* - Function"). When "permanently ON", the status LED lights up permanently in the configured colour.	

Dimming

A dimming function is executed with a long button-press if the parameter "Long button-press = dimming function" is parametrised.

The dimming function is parametrised on the parameter page "Button *n* -> Button *n* - Function" under the scene configuration.

Individual objects per scene	Active **Inactive**
The device can perform a dimming function in the "Scene extension unit" button function with a long press of the button. A separate individual object or a collective object can be unlocked for each scene. With "Active", the ETS offers up to eight "Scene extension unit dimming scene *n*" communication objects. Up to eight scene-orientated dimming functions are executed. If "Inactive", the ETS offers a "Scene extension unit dimming scenes" communication object. A scene-independent dimming function is performed.	

Brightness on pressing	No reaction Brighter (scene toggle) Darker (scene toggle) **Lighter / Darker (scene toggle)**
This parameter determines the reaction when a button is pressed for the duration of the "Time between scene recall and dimming".	

Time between scene recall and dimming	**0** ... 50 s | 100 ... **400** ... 990 ms
This parameter defines how long the button must be pressed for a dimming telegram to be transmitted.	

Extended settings	Active **Inactive**
When the advanced parameters are activated, the ETS shows the following parameters.	

Dimming brightness by	1.5 % 3 % 6 % 12.5 % 25 % 50 % **100 %**
This parameter sets the relative dimming level when the brightness is increased. On each button actuation, the brightness is changed at maximum by the configured step width. It is recommended that the device repeats the dimming telegrams automatically, particularly with a small dimming level (see "Telegram repetition").	

Dimming darker by	1.5 % 3 % 6 % 12.5 % 25 % 50 % **100 %**
This parameter sets the relative dimming level when the brightness is reduced. On each button actuation, the brightness is changed at maximum by the configured step width. It is recommended that the device repeats the dimming telegrams automatically, particularly with a small dimming level (see "Telegram repetition").	

Telegram repetition	Active **Inactive**
This parameter can be used to activate telegram repetition for dimming. With telegram repetition activated, the device cyclically sends relative dimming telegrams (in the parameterised step width) to the bus if the button is pressed long.	

Time between two telegrams	**200 ms** 300 ms 400 ms 500 ms 750 ms 1 s 2 s
This parameter defines the interval at which the dimming telegrams are automatically repeated in the telegram repetition mode. This parameter is only visible if "Telegram repetition = active"!	

13.6.2 Object list

The following communication objects are available for the individual buttons or rockers, depending on the set operating concept. The object name corresponds to the selection for the operating concept (button or rocker). The name of the object can be specified by the parameter "Name of ..." parameter.

Function	Name	Type	DPT	Flag
Scene extension unit	Button/rocker *n* - output	1-byte	18,001	C, -, -, T, -
1-byte object for recalling or for storing one of 64 scenes max. from a scene pushbutton sensor. This object is only visible if the scene extension function is set to "scene extension without storage function" or "scene extension unit with storage function".				

Function	Name	Type	DPT	Flag
Scene extension unit dimming Scenes	Button/rocker *n* - output	4-bit	3,007	C, -, -, T, -
4-bit object for sending relative dimming telegrams to adjust the brightness.				

Function	Name	Type	DPT	Flag
Scene extension unit for dimming scene 1	Button/rocker *n* - output	4-bit	3,007	C, -, -, T, -
4-bit object for sending relative dimming telegrams to adjust the brightness.				

Function	Name	Type	DPT	Flag
Scene extension unit for dimming scene 2	Button/rocker *n* - output	4-bit	3,007	C, -, -, T, -
4-bit object for sending relative dimming telegrams to adjust the brightness.				

Function	Name	Type	DPT	Flag
Scene extension unit for dimming scene 3	Button/rocker *n* - output	4-bit	3,007	C, -, -, T, -
4-bit object for sending relative dimming telegrams to adjust the brightness.				

Function	Name	Type	DPT	Flag
Scene extension unit for dimming scene 4	Button/rocker *n* - output	4-bit	3,007	C, -, -, T, -
4-bit object for sending relative dimming telegrams to adjust the brightness.				

Function	Name	Type	DPT	Flag
Scene extension unit for dimming scene 5	Button/rocker *n* - output	4-bit	3,007	C, -, -, T, -
4-bit object for sending relative dimming telegrams to adjust the brightness.				

Function	Name	Type	DPT	Flag
Scene extension unit for dimming scene 6	Button/rocker *n* - output	4-bit	3,007	C, -, -, T, -
4-bit object for sending relative dimming telegrams to adjust the brightness.				

Function	Name	Type	DPT	Flag
Scene extension unit for dimming scene 7	Button/rocker *n* - output	4-bit	3,007	C, -, -, T, -
4-bit object for sending relative dimming telegrams to adjust the brightness.				

Function	Name	Type	DPT	Flag
Scene extension unit for dimming scene 8	Button/rocker *n* - output	4-bit	3,007	C, -, -, T, -
4-bit object for sending relative dimming telegrams to adjust the brightness.				

Function	Name	Type	DPT	Flag
Scene extension unit - Number of scenes	Button/rocker *n* - input	4-bit	5,010	C, -, W, -, -
This communication object can be used to specify a new value for the number of scenes (2...8) via the bus to the device. Received values outside the value range 2 to 8 are discarded as invalid.				

Function	Name	Type	DPT	Flag
Scene extension unit - Feedback - Number of scenes	Button/rocker *n* - output	4-bit	5,010	C, -, -, T, -
The device uses this communication object to report a newly received value for the number of scenes (2...8) back to the bus.				

13.7 2-channel operation

The "2-channel operation" function allows two function channels to be operated with a single press of a button. In some situations it is desirable to control two different functions with a single press of a button and to transmit different telegrams.

For both channels, the parameters "Function channel 1" and "Function channel 2" can be used to determine the communication object types to be used.

The following functions are available for selection:

- 1-bit switching
- 1-byte value transmitter (0...255)
- 1-byte value transmitter (0...100%)
- 1-byte value transmitter (-128...127)
- 1-byte value transmitter (0...255%)
- 2-byte value transmitter (0...65535)
- 2-byte value transmitter (-32768...32767)
- Value transmitter 2-byte temperature value
- Value transmitter 2-byte brightness value
- Value transmitter 2-byte colour temperature value
- Value transmitter 3-byte colour value RGB/HSV
- Value transmitter 6-byte colour value RGBW/HSVW
- Value transmitter 6-byte colour temperature value + brightness
- Recalling scene (external)

The object value that the device is to transmit on a button actuation can be selected depending on the selected function.

The "1-bit switching" type permits selecting whether an ON or an OFF telegram is to be transmitted or whether the object value is to be switched over (TOGGLE) and transmitted on the press of a button.

With parameterization as a value transmitter ("1-byte ..." or "2-byte ...") the object value can be selected within the value range.

With parameterization as a value transmitter ("3-byte ...") the RGB or HSV object values can be set via a colour picker.

With parameterization as a value transmitter (6-byte colour value ...") the RGB or HSV object values can be set via a colour picker. The object value W is parameterised using a separate slider.

When parameterising as a value transmitter (6-byte colour temperature value + brightness"), the object values colour temperature and brightness as well as a time window can be set.

"Recalling scene (...)" can be used to set the scene number to be transmitted to the bus when a button is pressed.

Unlike in the other rocker and button functions, the application program assigns the "Telegram acknowledge" function instead of the "Actuation display" function to the status LED. In this mode, the status LED lights up for approx. 250 ms with each telegram transmitted.

Operating concept channel 1 or channel 2

In this operating concept, exactly one telegram will be transmitted on each press of a button.

- A brief press causes the device to transmit the telegram channel 1.
- A long press causes the device to transmit the telegram for channel 2.

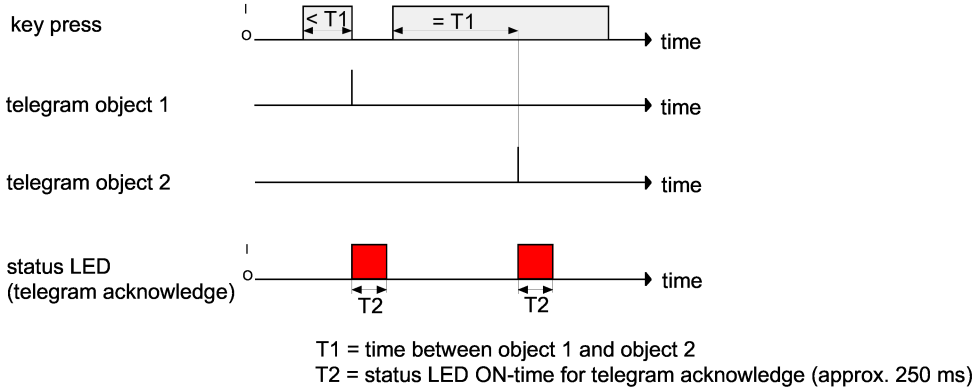

Figure 26: Example of operating concept "Channel 1 or Channel 2"

The time required for distinguishing between a short and a long operation is defined by the parameter "Time between channel 1 and channel 2". If the button is pressed for less than the configured time, only the telegram to channel 1 is transmitted. If the length of the button-press exceeds the time between channel 1 and channel 2, only the telegram to channel 2 will be transmitted. This concept provides the transmission of only one channel. To indicate that a telegram has been transmitted, the status LED lights up for approx. 250 ms in the "Telegram acknowledge" setting.
In this operating concept, the push-button sensor will not transmit a telegram immediately after the rocker has been depressed.

Operating concept channel 1 and channel 2

With this operating concept, one or alternatively two telegrams can be transmitted on each button-press.

- A brief press causes the device to transmit the telegram channel 1.
- A long press causes the device to transmit first the telegram for channel 1 and then the telegram for channel 2.

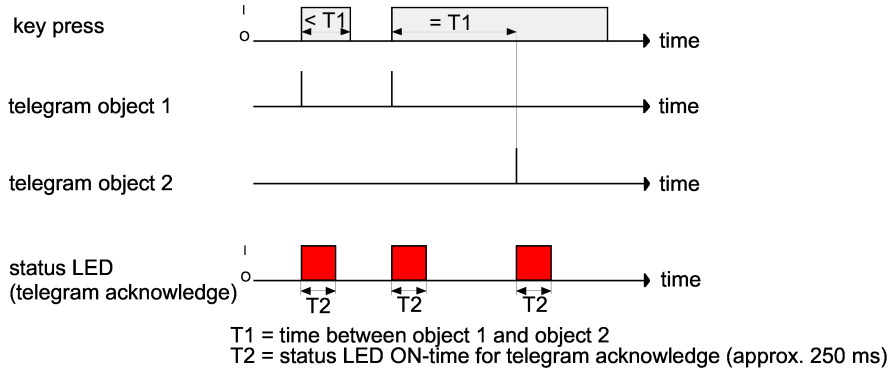

Figure 27: Example for operating concept "Channel 1 and channel 2"

The time required for distinguishing between a short and a long operation is defined by the parameter "Time between channel 1 and channel 2". In this operating concept, a button-press sends this telegram is immediately to channel 1. If the button is held depressed for the configured time, the telegram for the second channel is transmitted as well. If the button is released before the time has elapsed, no further telegram will be transmitted. This operating concept, too, offers the configurable possibility of having the transmission of a telegram signalled by the status LED (setting "Telegram acknowledge").

13.7.1 Table of parameters

The following parameters are available for the individual buttons, depending on the set operating concept. The default settings change in accordance with the set operating concept.

Operating concept	**Channel 1 or channel 2** Channel 1 and channel 2
This is where the 2-channel operating concept is defined. If the setting "channel 1 or channel 2" is selected, the device decides dependent on the button-press duration, which of the channels will be used. If the setting "channel 1 and channel 2" is selected, the device transmits only the telegram of channel 1 on a short button-press and both telegrams on a sustained button-press.	

Function channel 1 (Function channel 2)	no function 1-bit switching 1-byte (0...255) 1-byte (0...100%) 1-byte (-128...127) 1-byte (0...255%) 2-byte (0...65535) 2-byte (-32768...32767) 2-bytes temperature value 2-byte brightness value 2-bytes colour temperature value 3-bytes colour value RGB/HSV 6-bytes colour value RGBW/HSVW 6-bytes colour temperature value + brightness Recalling scene (external)
This parameter defines the channel function and specifies which other parameters and which communication objects are to be displayed for channel 1 or channel 2 respectively.	

Colour space	**RGB** HSV
This parameter defines the colour space of the function. With RGB, communication can take place via individual objects or via a combination object. With HSV, communication takes place via individual objects. Visible only if "Function channel 1 (2) = 3-byte colour value RGB/HSV".	

Communication	**Single object** Combi object
When the colour space is set to RGB, communication via the bus can take place either via individual objects (red, green, blue) or via a combination object (RGB). Visible only if "Function channel 1 (2) = 3-byte colour value RGB/HSV".	

Colour space	**RGBW** HSVW
This parameter defines the colour space of the function. With RGBW, communication can take place via individual objects or via a combination object. With HSVW, communication takes place via individual objects. Visible only if "Function channel 1 (2) = 6-byte colour value RGBW/HSVW".	

Communication	**Single object** Combi object
When the colour space is set to RGBW, communication via the bus can take place either via individual objects (red, green, blue, white) or via a combination object (RGBW). Visible only if "Function channel 1 (2) = 6-byte colour value RGBW/HSVW".	

Time between channel 1 and channel 2	0...**3**...25 s | 0...990 ms
Depending on the selected operating concept, this parameter defines the interval at which the device transmits the telegram for channel 1 and the telegram for channel 2. A time from 100 ms to 25.5 s can be set.	

Command for channel 1 (2)	ON OFF **TOGGLE**
This parameter defines the object value transmitted to the bus when the button is pressed. Visible only if "Function channel 1 (2) = 1-bit switching".	

Value (0...255) for channel 1 (2)	**0**...255
This parameter defines the object value transmitted to the bus when the button is pressed. Visible only if "Function channel 1 (2) = 1-byte (0...255)".	

Value (0...100%) for channel 1 (2)	**0**...100
This parameter defines the object value transmitted to the bus when the button is pressed. Visible only if "Function channel 1 (2) = 1-byte (0...100%)".	

Value (-128...127) for channel 1 (2)	-128...**0**...127
This parameter defines the object value transmitted to the bus when the button is pressed. Visible only if "Function channel 1 (2) = 1-byte (-128...127)".	

Value (0...255%) for channel 1 (2)	**0**...255
This parameter defines the object value transmitted to the bus when the button is pressed. Visible only if "Function channel 1 (2) = 1-byte (0...255%)".	

Value (0...65535) for channel 1 (2)	**0**...65535
This parameter defines the object value transmitted to the bus when the button is pressed. Visible only if "Function channel 1 (2) = 2-byte (0...65535)".	

Value (-32768...32767) for channel 1 (2)	-32768...**0**...32767
This parameter defines the object value transmitted to the bus when the button is pressed. Visible only if "Function channel 1 (2) = 2-byte (-32768...32767)".	

Temperature value (0…40 °C) for channel 1 (2)	0...**20**...40
This parameter defines the object value transmitted to the bus when the button is pressed. Visible only if "Function channel 1 (2) = 2-byte temperature value".	

Brightness value (0, 50, …, 1500 lux) for channel 1 (2)	0...**300**...1500
This parameter defines the object value transmitted to the bus when the button is pressed. Visible only if "Function channel 1 (2) = 2-byte brightness value".	

Value (1000, 1100, ..., 10000) for channel 1 (2)	1000, 1100, ...**2700,**..., 10000
This parameter determines the colour temperature of the object value when the button is pressed. It is only visible with "Function channel 1 (2) = 2-byte colour temperature value".	

Value (RGB/HSV) for channel 1 (2)	#000000 ... #FFFFFF
This parameter is used to determine the object values of the following output objects when the button is pressed: – "Channel *n* colour value transmitter red", "Channel *n* colour value transmitter green", "Channel *n* colour value transmitter blue" or – "Channel *n* colour value transmitter RGB", "Channel *n* colour value transmitter RGBW" or – "Channel *n* colour hue (H)", "Channel *n* saturation (S)", "Channel *n* brightness (V)" The parameter is only visible with "Function channel 1 (2) = 3-byte colour value RGB/HSV or 6-byte colour value RGBW/HSVW". The value (RGB/HSV) is configured by means of a colour picker. With the "6-byte colour value RGBW / HSVW" function, the W-value is configured using a separate slider.	

Value (W) for channel 1 (2)	**0** ... 255
This parameter is used to determine the object values of the following output objects when the button is pressed: – "Channel *n* colour value transmitter white" or – "Channel *n* colour value transmitter RGBW" The parameter is only visible with "Function channel 1 (2) = 2-byte colour temperature value".	

Value (W) for channel 1 (2)	**0** ... 100 %
This parameter is used to determine the object values of the following output objects when the button is pressed: – "Channel *n* white value (W)" The parameter is only visible with "Function channel 1 (2) = 2-byte colour temperature value".	

Colour temperature	1000, 1100, ..., **2700**, ..., 10000
This parameter determines the colour temperature of the object value when the button is pressed. The parameter is only visible with "Function channel 1 (2) = 6-byte colour temperature value + brightness".	

Brightness	**0** ... 100 %
This parameter determines the brightness of the object value when the button is pressed. The parameter is only visible with "Function channel 1 (2) = 6-byte colour temperature value + brightness".	

Time window	0 ... 100 min | 0 ... **1** ... 59 s | 0 ... 900 ms
This parameter determines the time period in which the actuator adjusts the colour temperature and brightness after the button has been pressed. The parameter is only visible with "Function channel 1 (2) = 6-byte colour temperature value + brightness".	

Scene number (1…64) for channel 1 (2)	**1**...64
This parameter defines the object value transmitted to the bus when the button is pressed. It is only visible if "Function channel 1 (2) = Recalling scene (external)".	

13.7.2 Object list

The following communication objects are available for the individual buttons or rockers, depending on the set operating concept. The name of the object corresponds to the selection of the operating concept and can be specified by the parameter "Name of ..." parameter.

Function	Name	Type	DPT	Flag
Channel 1 switching	Button/rocker *n* - output	1-bit	1,001	C, -, W, T, U
1-bit object for transmitting switching telegrams on channel 1 if 2-channel operation is activated.				

Function	Name	Type	DPT	Flag
Channel 2 switching	Button/rocker *n* - output	1-bit	1,001	C, -, W, T, U
1-bit object for transmitting switching telegrams on channel 2 if 2-channel operation is activated.				

Function	Name	Type	DPT	Flag
Channel 1 value 0...255	Button/rocker *n* - output	1-byte	5,010	C, -, -, T, -
1-byte object for transmitting value telegrams on channel 1 if 2-channel operation is activated.				

Function	Name	Type	DPT	Flag
Channel 2 value 0...255	Button/rocker *n* - output	1-byte	5,010	C, -, -, T, -
1-byte object for transmitting value telegrams on channel 2 if 2-channel operation is activated.				

Function	Name	Type	DPT	Flag
Channel 1 value 0...100 %	Button/rocker *n* - output	1-byte	5,001	C, -, -, T, -
1-byte object for transmitting value telegrams on channel 1 if 2-channel operation is activated.				

Function	Name	Type	DPT	Flag
Channel 2 value 0...100 %	Button/rocker *n* - output	1-byte	5,001	C, -, -, T, -
1-byte object for transmitting value telegrams on channel 2 if 2-channel operation is activated.				

Function	Name	Type	DPT	Flag
Channel 1 value -128...127	Button/rocker *n* - output	1-byte	6,010	C, -, -, T, -
1-byte object for transmitting value telegrams on channel 1 if 2-channel operation is activated.				

Function	Name	Type	DPT	Flag
Channel 2 value -128...127	Button/rocker *n* - output	1-byte	6,010	C, -, -, T, -
1-byte object for transmitting value telegrams on channel 2 if 2-channel operation is activated.				

Function	Name	Type	DPT	Flag
Channel 1 value 0...255 %	Button/rocker *n* - output	1-byte	5,004	C, -, -, T, -
1-byte object for transmitting value telegrams on channel 1 if 2-channel operation is activated.				

Function	Name	Type	DPT	Flag
Channel 2 value 0...255 %	Button/rocker *n* - output	1-byte	5,004	C, -, -, T, -
1-byte object for transmitting value telegrams on channel 2 if 2-channel operation is activated.				

Function	Name	Type	DPT	Flag
Channel 1 value 0...65535	Button/rocker *n* - output	2-byte	7,001	C, -, -, T, -
2-byte object for transmitting value telegrams on channel 1 if 2-channel operation is activated.				

Function	Name	Type	DPT	Flag
Channel 2 value 0...65535	Button/rocker *n* - output	2-byte	7,001	C, -, -, T, -
2-byte object for transmitting value telegrams on channel 2 if 2-channel operation is activated.				

Function	Name	Type	DPT	Flag
Channel 1 value -32768...32767	Button/rocker *n* - output	2-byte	8,001	C, -, -, T, -
2-byte object for transmitting value telegrams on channel 1 if 2-channel operation is activated.				

Function	Name	Type	DPT	Flag
Channel 2 value -32768...32767	Button/rocker *n* - output	2-byte	8,001	C, -, -, T, -
2-byte object for transmitting value telegrams on channel 2 if 2-channel operation is activated.				

Function	Name	Type	DPT	Flag
Channel 1 temperature value	Button/rocker *n* - output	2-byte	9,001	C, -, -, T, -
2-byte object for transmitting temperature values on channel 1 if 2-channel operation is activated.				

Function	Name	Type	DPT	Flag
Channel 2 temperature value	Button/rocker *n* - output	2-byte	9,001	C, -, -, T, -
2-byte object for transmitting temperature values on channel 2 if 2-channel operation is activated.				

Function	Name	Type	DPT	Flag
Channel 1 brightness value	Button/rocker *n* - output	2-byte	9,004	C, -, -, T, -
2-byte object for transmitting brightness values on channel 1 if 2-channel operation is activated.				

Function	Name	Type	DPT	Flag
Channel 2 brightness value	Button/rocker *n* - output	2-byte	9,004	C, -, -, T, -
2-byte object for transmitting brightness values on channel 2 if 2-channel operation is activated.				

Function	Name	Type	DPT	Flag
Channel 1 colour value transmitter	Button/rocker *n* - output	2-byte	7,600	C, -, -, T, -
2-byte object for transmitting colour temperature values from 1000 to 10000 Kelvin on channel 1 if 2-channel operation is activated.				

Function	Name	Type	DPT	Flag
Channel 2 colour value transmitter	Button/rocker *n* - output	2-byte	7,600	C, -, -, T, -
2-byte object for transmitting colour temperature values from 1000 to 10000 Kelvin on channel 2 if 2-channel operation is activated.				

Function	Name	Type	DPT	Flag
Channel 1 colour value transmitter RGB	Button/rocker *n* - output	3-byte	232,600	C, -, -, T, -
3-byte object for transmitting the colour information red, green and blue in a communication object on channel 1 if 2-channel operation is activated.				

Function	Name	Type	DPT	Flag
Channel 2 colour value transmitter RGB	Button/rocker *n* - output	3-byte	232,600	C, -, -, T, -
3-byte object for transmitting the colour information red, green and blue in a communication object on channel 2 if 2-channel operation is activated.				

Function	Name	Type	DPT	Flag
Channel 1 colour value transmitter RGBW	Button/rocker *n* - output	6-byte	251,600	C, -, -, T, -
6-byte object for transmitting the colour information red, green, blue and white in a communication object on channel 1 if 2-channel operation is activated.				

Function	Name	Type	DPT	Flag
Channel 2 colour value transmitter RGBW	Button/rocker *n* - output	6-byte	251,600	C, -, -, T, -
6-byte object for transmitting the colour information red, green, blue and white in a communication object on channel 2 if 2-channel operation is activated.				

Function	Name	Type	DPT	Flag
Channel 1 colour value transmitter Red	Button/rocker *n* - output	1-byte	5,001	C, -, -, T, -
1-byte object for transmitting the colour value red from 0 to 100 per cent on channel 1 if 2-channel operation is activated.				

Function	Name	Type	DPT	Flag
Channel 2 colour value transmitter Red	Button/rocker *n* - output	1-byte	5,001	C, -, -, T, -
1-byte object for transmitting the colour value red from 0 to 100 per cent on channel 2 if 2-channel operation is activated.				

Function	Name	Type	DPT	Flag
Channel 1 colour value transmitter Green	Button/rocker *n* - output	1-byte	5,001	C, -, -, T, -
1-byte object for transmitting the colour value green from 0 to 100 per cent on channel 1 if 2-channel operation is activated.				

Function	Name	Type	DPT	Flag
Channel 2 colour value transmitter Green	Button/rocker *n* - output	1-byte	5,001	C, -, -, T, -
1-byte object for transmitting the colour value green from 0 to 100 per cent on channel 2 if 2-channel operation is activated.				

Function	Name	Type	DPT	Flag
Channel 1 colour value transmitter Blue	Button/rocker *n* - output	1-byte	5,001	C, -, -, T, -
1-byte object for transmitting the colour value blue from 0 to 100 per cent on channel 1 if 2-channel operation is activated.				

Function	Name	Type	DPT	Flag
Channel 2 colour value transmitter Blue	Button/rocker *n* - output	1-byte	5,001	C, -, -, T, -
1-byte object for transmitting the colour value blue from 0 to 100 per cent on channel 2 if 2-channel operation is activated.				

Function	Name	Type	DPT	Flag
Channel 1 colour value transmitter White	Button/rocker *n* - output	1-byte	5,001	C, -, -, T, -
1-byte object for transmitting the colour value white from 0 to 100 per cent on channel 1 if 2-channel operation is activated.				

Function	Name	Type	DPT	Flag
Channel 2 colour value transmitter White	Button/rocker *n* - output	1-byte	5,001	C, -, -, T, -
1-byte object for transmitting the colour value white from 0 to 100 per cent on channel 2 if 2-channel operation is activated.				

Function	Name	Type	DPT	Flag
Channel 1 colour hue (H)	Button/rocker *n* - output	1-byte	5,003	C, -, -, T, -
1-byte object for sending the colour hue (H) from 0 ... 360° on channel 1 if 2-channel operation is activated.				

Function	Name	Type	DPT	Flag
Channel 2 colour hue (H)	Button/rocker *n* - output	1-byte	5,003	C, -, -, T, -
1-byte object for sending the colour hue (H) from 0 ... 360° on channel 2 if 2-channel operation is activated.				

Function	Name	Type	DPT	Flag
Channel 1 saturation (S)	Button/rocker *n* - output	1-byte	5,001	C, -, -, T, -
1-byte object for transmitting the saturation (S) from 0 to 100 per cent on channel 1 if 2-channel operation is activated.				

Function	Name	Type	DPT	Flag
Channel 2 saturation (S)	Button/rocker *n* - output	1-byte	5,001	C, -, -, T, -
1-byte object for transmitting the saturation (S) from 0 to 100 per cent on channel 2 if 2-channel operation is activated.				

Function	Name	Type	DPT	Flag
Channel 1 brightness (V)	Button/rocker *n* - output	1-byte	5,001	C, -, -, T, -
1-byte object for transmitting the brightness value (V) from 0 to 100 per cent on channel 1 if 2-channel operation is activated.				

Function	Name	Type	DPT	Flag
Channel 2 brightness (V)	Button/rocker *n* - output	1-byte	5,001	C, -, -, T, -
1-byte object for transmitting the brightness value (V) from 0 to 100 per cent on channel 2 if 2-channel operation is activated.				

Function	Name	Type	DPT	Flag
Channel 1 white level (W)	Button/rocker *n* - output	1-byte	5,001	C, -, -, T, -
1-byte object for transmitting the white value (W) from 0 to 100 per cent on channel 1 if 2-channel operation is activated.				

Function	Name	Type	DPT	Flag
Channel 2 white level (W)	Button/rocker *n* - output	1-byte	5,001	C, -, -, T, -
1-byte object for transmitting the white value (W) from 0 to 100 per cent on channel 2 if 2-channel operation is activated.				

Function	Name	Type	DPT	Flag
Channel 1 colour value transmitter + brightness	Button/rocker *n* - output	6-byte	249,600	C, -, -, T, -
6-byte object for transmitting the time window, colour temperature and brightness on channel 1 if 2-channel operation is activated.				

Function	Name	Type	DPT	Flag
Channel 2 colour value transmitter + brightness	Button/rocker *n* - output	6-byte	249,600	C, -, -, T, -
6-byte object for transmitting the time window, colour temperature and brightness on channel 2 if 2-channel operation is activated.				

Function	Name	Type	DPT	Flag
Channel 1 scene (external) 1…64	Button/rocker *n* - output	1-byte	18,001	C, -, -, T, -
1-byte object for transmitting scene values on channel 1 if 2-channel operation is activated.				

Function	Name	Type	DPT	Flag
Channel 2 scene (external) 1…64	Button/rocker *n* - output	1-byte	18,001	C, -, -, T, -
1-byte object for transmitting scene values on channel 2 if 2-channel operation is activated.				

13.8 Controller extension

The "controller extension" button or rocker function can be used to control a KNX room temperature controller.

The controller extension itself is not involved in the regulating process. With it, the user can operate the single-room regulation from different places in the room. It can also be used to adjust central heating control devices which are located, for instance, in a sub-distribution unit.

Typical KNX room temperature controllers generally offer different ways of influencing the room temperature control:

- Operating mode switchover:
  Switching over between different modes of operation (e.g. "Comfort", "Night" ...) with different setpoint temperatures assigned to each mode by the controller.
- Presence status:
  Signalling the presence of a person in a room. The signalling may also be combined with a configured switchover in the mode of operation.
- Setpoint shift:
  Adjustment of the setpoint temperature via a temperature offset (DPT 9.002) or via levels (DPT 6.010).

The controller extension is operated using the push button functions of the device. In this way, it is possible to completely control a room temperature controller by changing the operating mode, by predefining the presence function or by readjusting the setpoint shift.

In addition, the push-button sensor can – independent of the controller extension function – indicate the state of one or more room temperature controllers with the status LEDs of the rockers or buttons. This feature permits the indication of operating modes or the bit-oriented evaluation of different status objects of controllers. In case of the controller extension functions "Setpoint shift" or "Presence function", the status LEDs can also signal the state of the corresponding functions directly.

13.8.1 Operating mode switchover

Switchover of the controller operating mode can be effected in accordance with the standard function block for room temperature controllers defined in the KNX handbook using two 1-byte communication objects. The operating mode can be switched over with the normal and with the forced objects. The "Operating mode switchover" object offers a selection between the following modes:

- Comfort mode
- Standby mode
- Night mode
- Frost/heat protection mode

The "Forced object operating mode" communication object has a higher priority. It permits forced switching between the following modes of operation:

- Auto (normal operating mode switchover)
- Comfort mode
- Standby mode
- Night mode
- Frost/heat protection mode

The operating mode transmitted to the bus on a button actuation of the controller extension is defined by the parameter "Operating mode on pressing". Depending on the parameterised operating concept, either pressing a button activates one of the above modes (with the "rocker function" and "button function" operating concepts), or each button actuation toggles between two or three modes (only with the "rocker function" operating concept).

i Notes on multiple selection:
In order to ensure that a change-over from one operating mode to another works properly even from different locations, the operating mode objects of the controller and those of all controller extensions must be interlinked and have their "Write" flag set. In the objects concerned, this flag is set by default.
By checking the linked operating mode switchover feedback object, the controller extension knows which of the possible operating modes is active. Based on this information, the device switches over into the next operating mode in sequence when a button is actuated. In the event that none of the possible operating modes is active, the next operating mode in the sequence is activated. As far as switching over between the forced operating modes and "Auto" is concerned, the device switches into the "Auto" operating mode when none of the configured operating modes is active.

i If a status LED is to indicate the current operating mode, the status LED function must be programmed for "Operating mode indication" and its status object be linked with the corresponding group address for operating mode change-over with normal or high priority.

13.8.2 Presence function

All operating areas with a function set to "Presence function" have the two communication objects "Presence function" and "Presence function feedback". The parameter "Presence function on pressing" defines the object value transmitted to the bus on actuating a button.

In order to ensure that the object value transmitted in the "Presence TOGGLE" setting is always the correct one, the presence object of the room temperature controller and the feedback objects of the controller extensions must be interlinked and have their "Write" flag set. In the extension objects concerned, this flag is set by default.

The status LED of a presence function button can directly indicate the presence status (setting "Presence status indicator").

13.8.3 Setpoint shift

The setpoint shift is another available function of the controller extension. It makes use of either two 2-byte communication objects with datapoint type 9.002 or two 1-byte communication objects with datapoint type 6.010 (integer with sign).

This extension function allows shifting of the basic setpoint for the temperature on a room temperature controller by pressing a button. Operation of the extension unit is generally the same as the operation of the main controller. A button configured as a setpoint shifting button reduces or increases the setpoint shift value on each press by one step respectively. The direction of the value adjustment is defined by the parameters "Temperature difference on pressing" or "Setpoint shift on pressing".

The status LED of a setpoint shifting button can directly indicate the setpoint shifting status (setting "Setpoint value shift indicator").

Type of setpoint shift

The push-button sensor provides two options for setpoint shifting. Depending on the setting of the parameter "Type of setpoint shift", the shift takes place via the 2-byte communication object "Setpoint shift specification" (acc. to KNX DPT 9.002) or via the 1-byte-communication object "Setpoint shift specification" (acc. to KNX DPT 6.010).

The setting "Via offset (DPT 9.002)" defines the temperature difference in Kelvin by which the setpoint temperature will be shifted up or down when the button is pressed. For a setpoint value shift, the controller extension makes use of the two communication objects "Setpoint shift specification" and "Current setpoint shift". The "Current setpoint shift" communication object informs the extension unit about the current state of the room temperature controller. Based on this value and the respective parameter, the controller extension determines the new level size which it transmits via the "Setpoint shift specification" communication object to the room temperature controller.

With the "Via levels (DPT 6.010)" setting, only the direction of the setpoint shift on the extension unit is defined. For a setpoint value shift, the controller extension makes use of the two communication objects "Setpoint shift specification" and "Current setpoint shift". The "Current setpoint shift" communication object informs the extension unit about the current state of the room temperature controller. Based on this value and the respective parameter, the controller extension determines the new level size which it transmits via the "Setpoint shift specification" communication object to the room temperature controller.

Communication with main controller

In order to enable the push-button sensor to effect a setpoint shift in a room temperature controller, the controller must have input and output objects for setpoint shifting. In this case, the output object of the controller must be linked with the input object of the extension unit and the input object of the controller must be linked with the output object of the extension unit via an independent group address.

All objects are of the same datapoint type and have the same value range. A setpoint shift is interpreted by count values: a shift in positive direction is expressed by positive values whereas a shift in negative direction is represented by negative object values. An object value of "0" means that no setpoint shift has been activated.

Via the "Current setpoint shift" object of the controller extensions, which is linked with the room temperature controller, the extensions are enabled to determine the current setpoint shift position. Starting from the value of the communication object, each button-press on an extension unit will adjust the setpoint in the configured direction. Each time the setpoint is adjusted, the new shift is transmitted to the room temperature controller via the "Controller extension setpoint value specification" object of the controller extension. The controller itself checks the received value for the minimum and maximum temperature limits (see controller documentation) and adjusts the new setpoint shift if the values are valid. When the new count value is accepted as valid, the controller transfers this value to its output object for setpoint shifting and retransmits the value to the extension as feedback.

Due to the standard data point type used as the output and input object of the controller extension, each extension unit is able to determine whether a shift took place, in which direction it took place and by which value (DPT 9.002) or by how many levels (DPT 6.010) the setpoint was shifted.

i In "Via levels (DPT 6.010)" function, the weighting of the respective level is done by the controller itself.

i This requires that the communication objects are connected on all controller extensions and the controller. The feedback information from the controller enables the extension unit to continue the adjustment anytime at the right point.

13.8.4 Table of parameters

The following parameters are available for the individual buttons or for the left and right sides of the rockers, depending on the set operating concept. The default settings change in accordance with the set operating concept.

Functionality	**Operating mode switchover** Forced operating mode switchover Presence function Setpoint shift
A controller extension can optionally switch over the operating mode with normal or high priority (forced), change the presence state or change the current room temperature setpoint value. With regard to the setting of this parameter, the ETS shows further parameters.	

Operating mode on pressing	**Comfort mode** Standby mode Night mode Frost/heat protection mode Comfort mode -> Standby mode ->* Comfort mode -> Night mode ->* Standby mode -> Night mode ->* Comfort mode -> Standby mode -> Night mode ->*
If the controller extension is to change over the operating mode of the room temperature controller with normal priority, the extension can – when operated – either switch on a defined operating mode or change over between different operating modes. This parameter is only visible if "Function = operating mode switchover". * Only for operating concept = button function The options "Comfort mode -> Standby mode ->", "Comfort mode -> Night mode ->", "Standby mode -> Night mode ->" and "Comfort mode -> Standby mode -> Night mode ->" are only available if the operating concept is set to button function. i Toggling between operating modes (identified by "->") is only possible if the object value has been received via the "Operating mode switchover feedback" object.	

Forced operating mode on pressing	Auto (Normal operating mode switchover) **Comfort mode** Standby mode Night mode Frost/heat protection mode Comfort mode -> Standby mode ->* Comfort mode -> Night mode ->* Standby mode -> Night mode ->* Comfort mode -> Standby mode -> Night mode ->* Auto -> Comfort mode -> Auto -> Standby mode -> Auto -> Night mode -> Auto -> Frost/heat protection mode ->

If the controller extension is to change over the operating mode of the room temperature controller with high priority, the extension can – when operated – either enable change-over with normal priority (Auto), switch on a defined operating mode with high priority or change over between different operating modes.

This parameter is only visible if "Function = forced operating mode switchover".

* Only for operating concept = button function
The options "Comfort mode -> Standby mode ->", "Comfort mode -> Night mode ->", "Standby mode -> Night mode ->", "Comfort mode -> Standby mode -> Night mode ->", Auto -> Comfort mode ->", "Auto -> Standby mode ->", "Auto -> Night mode ->" and "Auto -> Frost/heat protection mode ->" are only available if the operating concept is set to button function.

i Toggling between forced object operating modes (identified by "->") is only possible if the object value has been received via the "Forced object operating mode feedback" object.

Presence function on pressing	Presence OFF Presence ON **Presence TOGGLE**

On pressing a button, the controller extension can switch the presence state of the room temperature controller either on or off in a defined way or change over between both states ("Presence TOGGLE").

This parameter is only visible if "Functionality = presence function".

Type of setpoint shift	**Via offset (DPT 9.002)** Via levels (DPT 6.010)
Depending on the setting of the parameter "Type of setpoint shift", the shift takes place via the 2-byte communication object "Setpoint shift specification" (acc. to KNX DPT 9.002) or via the 1-byte-communication object "Setpoint shift specification" (acc. to KNX DPT 6.010). This parameter is only visible if "Function = Setpoint shift".	

Temperature difference on pressing	-2 K -1.5 K -1 K -0.5 K 0.5 K 1 K 1.5 K 2 K
The temperature difference is defined in Kelvin here by which the setpoint temperature will be shifted up or down when the button is pressed. For a setpoint value shift, the controller extension makes use of the two communication objects "Setpoint shift specification" and "Current setpoint shift". The "Current setpoint shift" communication object informs the extension unit about the current state of the room temperature controller. Based on this value and the respective parameter, the controller extension determines the new level size which it transmits via the "Setpoint shift specification" communication object to the room temperature controller. This parameter is only visible if "Function = Setpoint shift" and "Type of setpoint shift = Via offset".	

Setpoint shift on pressing	Reduce setpoint value (level size) **Increase setpoint (level size)**
This parameter defines the direction of the setpoint shift on the extension unit. For a setpoint value shift, the controller extension makes use of the two communication objects "Setpoint shift specification" and "Current setpoint shift". The "Current setpoint shift" communication object informs the extension unit about the current state of the room temperature controller. Based on this value and the respective parameter, the controller extension determines the new level size which it transmits via the "Setpoint shift specification" communication object to the room temperature controller. This parameter is only visible if "Function = Setpoint shift" and "Type of setpoint shift = Via levels".	

13.8.5 Object list

The following communication objects are available for the individual buttons or rockers, depending on the set operating concept. The object name corresponds to the selection for the operating concept (button or rocker). The name of the object can be specified by the parameter "Name of ..." parameter.

Function	Name	Type	DPT	Flag
Operating mode switchover	Button/rocker n - controller extension - output	1-byte	20,102	C, -, W, T, -
1-byte object for switching a room temperature controller between the Comfort, Standby, Night and Frost/heat protection operating modes. This object is only visible if "Functionality = operating mode switchover".				

Function	Name	Type	DPT	Flag
Operating mode switchover feedback	Button/rocker n - controller extension - input	1-byte	20,102	C, -, W, -, U
1-byte object for receiving the operating mode of a room temperature controller. This object is only visible if "Functionality = operating mode switchover".				

Function	Name	Type	DPT	Flag
Operating mode forced-control	Button/rocker n - controller extension - output	1-byte	20,102	C, -, W, T, -
1-byte object for switching a room temperature controller under forced control between the Automatic, Comfort, Standby, Night and Frost / heat protection operating modes. This object is only visible if "Functionality = forced operating mode switchover".				

Function	Name	Type	DPT	Flag
Forced object operating mode feedback	Button/rocker n - controller extension - input	1-byte	20,102	C, -, W, -, U
1-byte object for receiving the operating mode of a room temperature controller. This object is only visible if "Functionality = forced operating mode switchover".				

Function	Name	Type	DPT	Flag
Presence function	Button/rocker n - controller extension - output	1-bit	1,018	C, -, W, T, -
1-bit object for changing over the presence status of a room temperature controller. This object is only visible if "Functionality = presence function".				

Function	Name	Type	DPT	Flag
Presence function feedback	Button/rocker n - controller extension - input	1-bit	1,018	C, -, W, -, U
1-bit object for receiving the presence status of a room temperature controller. This object is only visible if "Functionality = presence function".				

Function	Name	Type	DPT	Flag
Preset setpoint shifting	Button/rocker n - controller extension - output	2-byte	9,002	C, -, W, T, -
2-byte object for presetting a basic setpoint shift in Kelvin. The value "0" means that no shift is active . Values can be specified between -670760 K and 670760 K. This object is only visible if "Function = Setpoint shift" and "Type of setpoint shift = Via offset (DPT 9.002)".				

Function	Name	Type	DPT	Flag
Current setpoint shifting	Button/rocker n - controller extension - input	2-byte	9,002	C, -, W, -, U
2-byte object for receiving the feedback from the current basic setpoint shift in Kelvin. This object is only visible if "Function = Setpoint shift" and "Type of setpoint shift = Via offset (DPT 9.002)".				

Function	Name	Type	DPT	Flag
Preset setpoint shifting	Button/rocker n - controller extension - output	1-byte	6,010	C, -, W, T, -
1-byte object for presetting a basic setpoint shift. The value "0" means that no shift is active . The value is depicted in a two's complement in the positive or negative direction. This object is only visible if "Function = Setpoint shift" and "Type of setpoint shift = Via levels (DPT 6.010)".				

Function	Name	Type	DPT	Flag
Current setpoint shifting	Button/rocker n - controller extension - input	1-byte	6,010	C, -, W, -, U
1-byte object for receiving the feedback from the current basic setpoint shift. This object is only visible if "Function = Setpoint shift" and "Type of setpoint shift = Via levels (DPT 6.010)".				

13.9 Status LED

A rocker on the push-button sensor is always associated with two status LEDs. Accordingly, each status LED is assigned to a button.

The "Function of status LED" parameter on the "Button *n* - status LED" or "Rocker *n* - status LED" parameter pages defines the basic functions of this status LED. Depending on the button or rocker function set, the status LED functions that can be selected differ slightly.

i The parameter pages for the status LED are arranged downstream of the rocker or button pages and include the respective status LEDs assigned to the rockers or buttons (for buttons only one status LED each / for rockers two status LEDs each).

Priorities of the status LED

The status LEDs operate according to a defined order of priorities.

Priority	Function
1	LED alarm signal
2	Superposed function
3	Basic function (e.g. always ON, status display, ...)
4	LED orientation lighting

i Exception: A status LED will also indicate actuation if the status LED is controlled by the superposed function.

13.9.1 Basic functions

"always OFF" or "always ON"

The corresponding status LED is always switched off or always switched on depending on the parameter setting.

"Button-press display" or "Telegram acknowledgement"

A status LED used as button-press indicator is switched on by the push-button sensor each time the corresponding rocker or button is actuated. The parameter "ON time of status LEDs as actuation indicators" on the parameter page "General" specifies for how long the LED is switched on in common for all status LEDs. Even if the push-button sensor only transmits a telegram when released, the status LED lights up anyway when the rocker or button is actuated.
With the function "2-channel operation" the option "Button-press display" is replaced by "Telegram acknowledge". In this case the status LED is illuminated when both channels are transmitted for about 250 ms each.

This setting cannot be selected for the rocker/button function "No function".

i A status LED will also indicate actuation if the status LED is controlled by the superposed function.

"Status display", "Inverted status display" and "Control via separate LED object"

In the rocker or button functions "switching" and "dimming", the status LEDs can also be linked internally to the "Switching feedback" object and thus signal the current switching state of the actuator group.
Alternatively each status LED can indicate the state of a separate LED communication object. Here the LED can be switched on or off statically via the 1-bit object value received, or also activated as flashing. If multiple status LEDs are configured to "flashing" and switched on, they will flash synchronously.
Both for the status indication of the LED object and also for the status indication of the switching object it is possible to indicate or evaluate the inverted object value.
After a bus reset or after ETS programming, the value of the LED object is always "OFF".

The settings "Status display" and "Inverted status display" can only be selected for the rocker/button functions "Switching" and "Dimming".

"Operating mode indication"

In this configuration the status LED has its own 1-byte communication object.
For switching over between different modes of operation, new room temperature controller can make use of two communication objects of the
20.102 "HVAC-Mode" data type. One of these objects can switch over with normal priority between the "Comfort", "Standby", "Night", "Frost/heat protection" operating modes. The second object has a higher priority. It permits switching over between "Automatic", "Comfort", "Standby", "Night", "Frost/heat protection". Automatic means in this case that the object with the lower priority is active.

If a status LED is to indicate the operating mode, the communication object of the status LED must be linked with the matching object of a room temperature controller (e. g. Controller status). The desired operating mode which the LED is to indicate can then be selected with the parameter "Status LED on with". The LED is then lit up when the corresponding operating mode has been activated at the controller.
After a bus reset or after ETS programming, the value of the LED object is always "0" (automatic).

"Controller status indication"

The status LED can indicate the controller status in the data formats "KNX-compliant" or "Controller general". According to parameterization, the "Controller status - KNX-compliant" or "Controller status - Controller general" object is proposed. These objects should be connected via group addresses to the communication objects of the main controller with the same functions.
The status objects combine different information. The "Status LED on with" parameter is used to select what information should be evaluated and displayed via the status LED.

The following can be selected with "KNX-compliant":

- Controller error status ("0" = no error / "1" = error)
- Operation ("0" = Cooling / "1" = Heating)
- Controller disabled ("0" = Controller enabled / "1" = Controller disabled)
- Frost alarm ("0" = Frost protection temperature exceeded / "1" = Frost protection temperature undershot)
- Heat alarm ("0" = Heat protection temperature exceeded / "1" = Heat protection temperature undershot)

The following can be selected with "Controller general":

- Comfort mode (Is active if the "Comfort" operating mode or a comfort extension is activated.)
- Standby mode (Is active if the "Standby" operating mode is activated.)
- Night mode (Is active if the "Night" operating mode is activated.)
- Frost/heat protection mode (Is active if the "Frost/heat protection" operating mode is activated.)
- Controller disabled (Is active if controller disable is activated (dew point mode).)
- Heating/cooling (Is active if heating is activated and inactive if cooling is activated. Is usually inactive with controller disabled.)
- Controller inactive (Is active in the "Heating and cooling" operation when the measured room temperature lies within the deadband. This status information is as a rule always "0" for the individual operating modes "heating" or "cooling"! Is inactive if controller is disabled.)
- Frost alarm (Is active if the measured room temperature reaches or drops below + 5 °C.)

"Presence status indication" and "Inverted presence status indication"

When the presence status is indicated, the LED evaluates the value of the object "Feedback presence function" and switches either on or off, depending on the parameter configuration in the ETS.

This setting can only be selected for the rocker/button functions "Controller extension - Presence function".

"Setpoint value shift indication"

When a setpoint shift is indicated the LED evaluates the value of the "Current setpoint shift" object and switches either on or off, depending on the parameter configuration in the ETS.

This setting can only be selected for the rocker/button functions "Controller extension - Setpoint shift".

Besides the functions that can be set separately for each status LED, all status LEDs are also used for LED alarm signalling. If this is active, all LEDs of the push-button sensor flash simultaneously. After deactivation of the alarm signalling, all LEDs will immediately return to the state corresponding to their parameters and communication objects (see chapter "LED alarm signal" ▸ Page 128).

Besides the functions that can be set separately for each status LED, all status LEDs are also used for LED orientation lighting. Depending on the configuration, the LED orientation lighting function will be executed with low priority (see chapter "LED orientation lighting" ▸ Page 132).

13.9.2 Colour settings

The colour of the status LEDs can be adjusted. The colour in the ETS can be selected from red, green, blue, yellow, cyan, orange, violet and white. In the colour configuration a distinction is made between whether all of the status LEDs of the push-button sensor have the same colour (common colour setting), or whether alternatively various colours can be configured for each status LED (separate colour setting). The difference is as follows:

– All status LEDs have the same colour.

  If common colour setting is desired, then the parameter "Colour selection of all status LEDs" on parameter page "General" must be configured. The status LEDs light up in the configured colour when they are subsequently switched on in normal operation of the push-button sensor in accordance with the basic configuration "Function of the status LED".

  The status LEDs may light up in a different colour if they are overridden by the superposed function of if LED alarm signalling or LED orientation lighting is activated.

– The status LEDs have various colours.

If separate colour setting is desired, then the parameter "Colour selection of all status LEDs" on parameter page "General" must be configured to the setting "Colour selection per rocker/button". In this case additional parameters become visible on the parameter pages of the individual status LEDs. The parameters "Colour of the status LED" can then be used individually to define the desired colour for each status LED. The status LED lights up in the configured colour when it is subsequently switched on in normal operation of the pushbutton sensor in accordance with the basic configuration "Function of the status LED".

Superposed function

Additionally, a superposed function can be enabled for each status LED. The superposed function allows for a colour change of the status LED during device operation. It is also possible here to change the display function.

i A status LED will also indicate actuation if the status LED is controlled by the superposed function.

The superposed function of a status LED is controlled by a separate communication object. The device provides the two following options for controlling the superposed function:

- Control via separate LED object (1-bit)
- Control via separate LED object (1-byte)

Depending on the superposed function selected, the device provides either a 1-bit object or a 1-byte object.

If control via the 1-bit object is selected, the superimposed function is defined in the ETS parameters. You can use the parameters to set whether the superposed function will be switched on or off via a 1-telegram or a 0-telegram, and whether the status LED will statically be switched on or flash with the superposed function switched on. You can additionally set a separate colour for the superposed function in which the status LED will light up when the superposed function is switched on. When a superposed function is switched off the status LED will be activated according to its basic configuration (regular colour and display function).

If control via the 1-byte object is selected, the superposed function is defined by the bit coding of the 1-byte communication object. No other parameters are available in the in the ETS. The bit coding of the 1-byte communication object "Superposed function" is shown in the table below.

Value of the telegram	Superposed function of the status LED
0_{dec}	Superposed function is deactivated. Status LED has standard colours and display function.
1_{dec}	Lights up red
2_{dec}	Flashes red
3_{dec}	Lights up green
4_{dec}	Flashes green

Value of the telegram	Superposed function of the status LED
5_{dec}	Lights up blue
6_{dec}	Flashing blue
7_{dec}	Lights up white
8_{dec}	Flashes white
9_{dec}	Lights up yellow
10_{dec}	Flashes yellow
11_{dec}	Lights up cyan
12_{dec}	Flashes cyan
13_{dec}	Lights up orange
14_{dec}	Flashes orange
15_{dec}	Lights up violet
16_{dec}	Flashes violet

i The superposed function is initially always inactive after a device reset. The superposed function is only executed when a telegram is received via the corresponding object.

i Regardless of the basic configuration of the status LED and the superposed function, the LEDs always flash red when an LED alarm message is active. An LED alarm message has a higher priority and thus overrides the basic display and the superposed function. After deactivation of the alarm signalling, all LEDs will immediately return to the state corresponding to their parameters and communication objects.

i During colour configuration it must be ensured that different colours are configured for the basic display and the superposed function. If this is not done (the colours are the same), then when the display is static it is not possible to determine which display function is being indicated.

i During flashing the status LED switches cyclically between the "switched-on" and "switched-off" states. No colour change is performed between the regular colour and the superposed colour.

13.9.3 Brightness settings

The brightness of all status LEDs is defined in the ETS. The "Brightness of all status LEDs" parameter on the "General" parameter page can be used to set the regular brightness of all status LEDs in 6 levels (level 0 = OFF, level 1 = dark, ...,
level 5 = bright).

Optionally the brightness can be changed during operation of the push-button sensor, controlled by the LED night reductionLED night reduction.

13.9.4 Table of parameters

"General" parameter page

Colour selection of all status LEDs	Red Green Blue Yellow Cyan Orange Violet **White** Colour selection per rocker/button
The colour of the status LED can be selected here. In the colour configuration a distinction is made between whether all of the status LEDs of the push-button sensor have the same colour or whether alternatively various colours can be configured for the LEDs ("Colour selection per rocker/button" setting). With colour selection per rocker or button, it is possible to set the colour on the parameter pages of the individual status LEDs.	

Brightness of all status LEDs	Level 0 (OFF) Level 1 (dark) Level 2 Level 3 **Level 4** Level 5 (bright)
The brightness of all status LEDs of the push-button sensor can be defined. The regular illumination brightness of all LEDs can be set here in 6 levels.	

Light period of status LED for button-press indicator	1 s 2 s **3 s** 4 s 5 s
This parameter defines the switch-on time the status LED is lit up to indicate actuation. The setting concerns all status LEDs whose function is set to "Button-actuation display".	

The following parameters are available for the individual buttons or for the left and right sides of the rockers, depending on the set operating concept and function. The default settings change in accordance with the set operating concept.

Function of status LED	always OFF always ON **Button-actuation indication** Telegram acknowledgment Status indication Inverted status indication Control via separate LED object Operating mode indication Controller status indication Presence status indication Inverted presence status indication Setpoint value shift indication

always OFF: The status LED is permanently switched off.

always ON: The status LED is permanently switched on.

Button-actuation display: The status LED indicates a button actuation. The ON time is set on the parameter page "General" in common for all status LEDs that are configured as actuation displays.

Telegram acknowledge: The status LED indicates the transmission of a telegram in 2-channel operation.

Status display: The status LED indicates the state of the communication object "Switching". If the object value is "ON", the status LED is illuminated. If the object value is "OFF" the status LED is switched off.

Inverted status display: The status LED indicates the state of the communication object "Switching". If the object value is "OFF", the status LED is illuminated. If the object value is "ON" the status LED is switched off.

Control via separate LED object: The status LED indicates the state of its own, separate 1-bit LED object. This setting causes the additional parameter "Control of the status LED via object value" to be shown.

Operating mode display: The status LED indicates the state of a KNX room temperature controller via a separate 1-byte communication object. This setting causes the additional parameter "Status LED ON with" to be shown.

Controller status display: The status LED indicates the state of the room temperature controller or the controller extension. This setting causes the additional parameter "Status LED ON with" to be shown.

Presence status indication: The status LED indicates the status of the "Feedback presence function" feedback object.

Inverted presence status indication: The status LED indicates the inverted status of the "Feedback presence function" feedback object.

Setpoint value shift display: The status LED indicates the state of a setpoint shift in case of main controller and controller extension operation. This setting causes the additional parameter "Status LED" to be shown.

The following parameter is exclusively visible with "Function of status LED = indication via separate LED object".

Control of the status LED via object value	**1 = LED static ON / 0 = LED static OFF** 1 = LED static OFF / 0 = LED static ON 1 = LED flashes / 0 = LED static OFF 1 = LED static OFF / 0 = LED flashes
If the "Function of status LED" is set to "Control via separate LED object", this parameter can be used to specify the telegram polarity of the 1-bit object "Status LED - Input". The status LED can be switched on or off statically. In addition, the received switching telegram can be evaluated in such a way that the LED flashes.	

The following parameter is exclusively visible with "Function of status LED = Operating mode display".

Status LED ON with	Automatic Comfort mode **Standby mode** Night mode Frost/heat protection mode
The values of a communication object with data type 20.102 "HVAC Mode" are defined as follows: 0 = Automatic 1 = Comfort 2 = standby 3 = Night 4 = Frost/heat protection The value "Automatic" is used only by the "forced operating mode switch-over" objects. The status LED is illuminated when the object receives the value configured here.	

The following parameter is exclusively visible with "Function of status LED = Controller status indication" and "Controller status = KNX-compliant".

Status LED ON with	**Controller error status** Operation (Heating = 1 / Cooling = 0) Controller disabled (dew point operation) Frost alarm Heat alarm
This parameter is used to define which information about the controller status is to be indicated by the LED.	

The following parameter is exclusively visible with "Function of status LED = Controller status indication" and "Controller status = Controller general".

Status LED ON with	**Comfort mode** Standby mode Night mode Frost/heat protection mode Controller disabled Heating / Cooling (Heating = 1 / Cooling = 0) Controller inactive (deadband operation) Frost alarm
This parameter is used to define which information about the controller status is to be indicated by the LED.	

The following parameter is exclusively visible with "Function of status LED = Setpoint shift indication".

Status LED	**ON in case of variation** On in case of positive variation ON in case of negative variation OFF in case of variation OFF in case of positive variation OFF in case of negative variation
This parameter defines at which setpoint variation the status LED will be switched on or off.	

The following parameter is exclusively visible with "Colour selection of all status LEDs = Colour selection per rocker/button" ("General" parameter page).

Colour of the status LED	Red Green Blue Yellow Cyan Orange Violet **White**
If separate colour settings for the status LEDs are required, then this parameter can be used individually to define the desired colour for each status LED. The LED lights up in the configured colour if it is subsequently switched on regularly in operation of the push-button sensor in accordance with the basic configuration "Function of the status LED".	

Superposed function	enabled **disabled**
Additionally, a superposed function can be enabled separately for each status LED. The superposed function can be used to change the colour of a status LED via a 1-byte communication object during device operation. It is also possible here to change the display function.	

Selection of the superposed function	**Control via separate LED object (1-bit)** Control via separate LED object (1-byte)
This parameter defines whether the superposed function of the status LED is controlled via a 1-bit object or via a 1-byte object. If "Control via separate LED object (1-bit)" is selected, the superimposed function is defined in the ETS parameters. If "Control via separate LED object (1-byte)" is selected, the superimposed function is defined in the 1-byte communication object bit coding.	

Superposed function ON when	**1 telegram** 0 telegram
This parameter is used to set whether the superposed function will be switched on via a 1-telegram or a 0-telegram. If the setting "1 telegram" is selected, the superposed function will be switched on via a 1-telegram and switched off via a 0-telegram. If the setting "0 telegram" is selected, the superposed function will be switched on via a 0-telegram and switched off via a 1-telegram. This parameter is only visible when "Selection of superposed function" = "Control via separate LED object (1-bit)".	

Type of reading with superposed function	**LED static ON** LED flashes
This parameter defines whether the status LED will be statically switched on or flash when the superposed function is switched on. This parameter is only visible when "Selection of superposed function" = "Control via separate LED object (1-bit)".	

Colour of the superposed status LED	**Red** Green Blue Yellow Cyan Orange Violet White
The status LED lights up in the colour set here when the superposed function is switched on. This parameter is only visible when "Selection of superposed function" = "Control via separate LED object (1-bit)".	

13.9.5 Object list

The following communication objects are available for the individual buttons or rockers, depending on the set operating concept. The object name corresponds to the selection for the operating concept (button or rocker). The name of the object can be specified by the parameter "Name of ..." parameter.

Function	Name	Type	DPT	Flag
Switching	Button/rocker *n* - status LED - input	1-bit	1,001	C, -, W, -, -
1-bit object to control the status LED. This object is only visible with "Function of status LED = Control via separate LED object".				

Function	Name	Type	DPT	Flag
Operating mode indication	Button/rocker *n* - status LED - input	1-byte	20,102	C, -, W, -, -
1-byte object to control the status LED. This object is only visible with "Function of status LED = Operating mode display".				

Function	Name	Type	DPT	Flag
Controller status - KNX-compliant	Button/rocker *n* - status LED - input	2-byte	22,101	C, -, W, -, -
2-byte object to control the status LED. This object is only visible with "Function of status LED = Controller status indication" and "Controller status = KNX-compliant".				

Function	Name	Type	DPT	Flag
Controller status - controller general	Button/rocker *n* - status LED - input	1-byte	---	C, -, W, -, -
1-byte object to control the status LED. This object is only visible with "Function of status LED = Controller status indication" and "Controller status = Controller general".				

Function	Name	Type	DPT	Flag
Superposed function	Button/rocker n - status LED - input	1-bit	1,001	C, -, W, -, -
1-bit object for forced control of the status LED. It enables the superposed function to be switched on or off when "Control via separate LED object (1-bit)" is set.				

Function	Name	Type	DPT	Flag
Superposed function	Button/rocker n - status LED - input	1-byte	---	C, -, W, -, -
1-byte object for forced control of the status LED. This can be used to change the colour and display information of individual status LEDs according to priority when "Control via separate LED object (1-byte)" is set. "0" = Superposed function is deactivated "1" = LED lights up red, "2" = LED flashes red "3" = LED lights up green, "4" = LED flashes green "5" = LED lights up blue, "6" = LED flashes blue "7" = LED lights up white, "8" = LED lights up white "9" = LED lights up yellow, "10" = LED flashes yellow "11" = LED lights up cyan, "12" = LED flashes cyan "13" = LED lights up orange, "14" = LED flashes orange "15" = LED lights up violet, "16" = LED flashes violet				

14 Channel-independent device functions

The following subchapters provide a description of the device functions. Each subchapter consists of the following sections:

- Functional description
- Table of parameters
- Object list

Functional description

The functional description explains the function and provides helpful tips on project design and usage of the function. Cross references support you in your search for further information.

Table of parameters

The table of parameters lists all parameters associated with the function. Each parameter is documented in a table as follows.

Name of the parameter	Parameter values
Parameter description	

Object list

The object list specifies and describes all communication objects associated with the function. Each communication object is documented in a table.

Function	This column contains the function of the communication object.
Name	This column contains the name of the communication object.
Type	This column contains the length of the communication object.
DPT	This column assigns a datapoint type to a communication object. Datapoint types are standardized in order to ensure interoperability of KNX devices.
Flag	This column assigns the communication flags in accordance with the KNX specification.
C-Flag	activates / deactivates the communication of the communication object
R-Flag	enables externally triggered reading of the value from the communication object
W-Flag	enables externally triggered writing of the value to the communication object
T-Flag	enables transfer of a value
U-Flag	enables updating of an object value in case of feedback
I-Flag	enforces updating of the communication object value when the devices is switched on (reading at init)

14.1 LED alarm signal

The push-button sensor permits signalling of an externally reported alarm via its status LED. The alarm can be triggered, for instance, in case of burglary or fire through a KNX central alarm unit. The push-button sensor signals an alarm by all status LEDs of the push-button sensor flashing synchronously. This alarm indication can be separately enabled with the parameter "LED alarm signalling" on the "General" parameter page.

When LED alarm signalling is enabled, the ETS displays the "Alarm signalling" communication object and further alarm function parameters.

The "Alarm signalling" object is used as an input for activating or deactivating the indication alarm. The polarity of the object can be selected. When the object value corresponds to the "Alarm" condition, all status LEDs are always flashing red with a frequency of approx. 2 Hz. If there is an alarm, the behaviour of the status LED as configured in the ETS for normal operation have no significance. The LEDs adopt their originally configured behaviour only after the indication alarm function has been deactivated. Changes of the state of the LEDs during an alarm - if they are controlled by separate LED objects or if they signal button functions - are internally stored and recovered at the end of the alarm.

i Regardless of the colour configuration of the status LED in normal operation and with a superposed function, the LEDs always flash red when a indication alarm signal is active.

i When an indication alarm signal is active, the status LEDs of the push-button sensor always flash with the regular brightness ("Brightness of all status LEDs" parameter). The push-button sensor automatically deactivates night reduction as long as the indication alarm signal is active and updates it when the alarm signal is switched off and the night reduction object still is at "1"-active.

Apart from the possibility of deactivating an indication alarm via the alarm object, it can also be deactivated locally by a button actuation on the push-button sensor itself. The parameter "Reset alarm signalling by a button actuation?" defines the button response during an alarm:

- If this parameter is set to "Yes", active alarm indication can be deactivated by a button actuation on the push-button sensor. This button function does not cause the configured function of the pressed button to be executed. Only after the next button is pressed will the configuration of the button be evaluated and a telegram be transmitted to the bus, if applicable.
- If "No" has been selected, alarm indication can only be deactivated via the alarm signalling object. A button function will always directly execute the configured button function.

i With the disabling function configured, LED alarm signalling cannot be reset by a disabled button.

If alarm indication can be deactivated by actuating any button, the parameter "Use alarm acknowledge object?" defines whether an additional telegram for acknowledging the alarm is to be transmitted to the bus via the separate object "Acknowledge alarm message".

Such an acknowledge telegram can, for instance, be sent via a 'listening' group address to the "Alarm signalling" objects of other push-button sensors in order to reset the alarm status there as well. Attention must be paid during resetting of an alarm to the selectable polarity of the acknowledgement object.

i If the setting is "Alarm when OFF and alarm reset when ON", the bus must actively write "0" to the alarm object in order to activate the alarm after a reset or after programming with the ETS.

i An active alarm signalling is not stored so that the indication alarm is generally deactivated after a device reset or after programming with the ETS.

14.1.1 Table of parameters

"General" parameter page

LED alarm signal	Activated **Deactivated**
This parameter can be used to enable indication alarm. When alarm signalling is enabled, the ETS displays further parameters and up to two further communication objects.	

The following parameters are visible on the "LED alarm signalling" parameter page if LED alarm signalling has been activated.

Polarity of the alarm signalling object	**Alarm when ON and alarm reset when OFF** Alarm when OFF and alarm reset when ON
The alarm signalling object is used as an input for activating or deactivating indication alarm.	

Reset alarm signalling by a button actuation?	**Yes** No
If this parameter is set to "Yes", active alarm indication can be deactivated by a button actuation on the push-button sensor. This button function does not cause the configured function of the pressed button to be executed. Only after the next button is pressed will the configuration of the button be evaluated and a telegram be transmitted to the bus, if applicable. If "No" has been selected, alarm indication can only be deactivated via the alarm signalling object. A button actuation will always execute the configured button function.	

Use the alarm acknowledge object?	Yes **No**
If an indication alarm can be deactivated by a button actuation, this parameter defines whether an additional alarm acknowledge telegram is to be transmitted to the bus via the separate object "Alarm signalling acknowledge" after triggering by this button actuation.	

Acknowledge alarm signalling by	ON telegram **OFF telegram**
This parameter sets the polarity of the "Alarm signalling acknowledge" object. This parameter presetting depends on the selected polarity of the alarm message object.	

14.1.2 Object list

Function	Name	Type	DPT	Flag
Alarm signal	LED alarm signalling - input	1-bit	1,001	C, -, W, -, U
1-bit object for the reception of an alarm signalling (polarity configurable).				

Function	Name	Type	DPT	Flag
Alarm message acknowledge	LED alarm signalling - output	1-bit	1,001	C, -, -, T, -
1-bit object for transmitting the acknowledgement of an alarm signalling (polarity configurable).				

14.2 LED orientation lighting

All status LEDs of the push-button sensor can be used as orientation lights if necessary. The colour of the orientation light can be freely selected from the colour range available for the status LED. You can also set the brightness at which the status LED will light up when orientation light is switched on. When the LED orientation light is on, all status LEDs of the push-button sensor will always light up in the set colour and brightness. With LED night reduction activated, the corresponding parameter page can be used to configure a separate brightness for the orientation light during night reduction LED night reduction.

The LED orientation light is activated on the "General" parameter page and can subsequently be configured on the "LED orientation lighting" parameter page.

For orientation, the status LEDs can be:

- switched on continuously,
- switched on via an object, or
- switched on for a set period of time after pressing a button.

In accordance with the available selection options, random levels can be configured for the regular brightness and for the brightness with activated LED orientation lighting in the ETS. It is advisable to set the brightness value for LED orientation lighting to a lower level than regular brightness.

14.2.1 Table of parameters

"General" parameter page

LED orientation lighting	Activated **Deactivated**
The LED orientation light can be enabled here. If orientation lighting is enabled, the ETS shows further parameters and at most one more communication object.	

The following parameters are visible on the "LED orientation lighting" parameter page if LED orientation lighting has been activated.

Colour	Red Green Blue Yellow Cyan Orange Violet **White**
The colour for all status LEDs with LED orientation lighting switched on can be selected here.	

Functionality	always OFF **always ON** Control via object Automatic control
This parameter defines the function of LED orientation lighting. always OFF: LED orientation lighting is permanently switched off. always ON: LED orientation lighting is permanently switched on. Control via object: LED orientation lighting can be switched on and off via the "Switching orientation lighting" object. automatic control: LED orientation lighting is switched on with every press of a button and switched off after a parameterized on-time.	

Control via object value	**1 = static ON / 0 = static OFF** 1 = static OFF / 0 = static ON 1 = flashing / 0 = static OFF 1 = static OFF / 0 = flashing
With the "Control via object" function set, this parameter defines the object values for the "Switching orientation lighting" object.	

Switch-off after Minutes (0...20)	**0**...20
With the "automatic control" function set, this parameter defines the on-time for LED orientation lighting in minutes.	

Seconds (0...59)	0...**3**...59
With the "automatic control" function set, this parameter defines the on-time for LED orientation lighting in seconds.	

Brightness	Level 0 (OFF) Level 1 (dark) **Level 2** Level 3 Level 4 Level 5 (bright)
The brightness for all status LEDs with LED orientation lighting switched on can be selected here.	

14.2.2 Object list

Function	Name	Type	DPT	Flag
Switching orientation lighting	LED orientation lighting - input	1-bit	1,001	C, -, W, -, U
1-bit object for switching the orientation light on or off. The telegram polarity can be configured.				

14.3 LED night reduction

Optionally the brightness of the status LED can be changed during operation of the push-button sensor, controlled by the LED night reduction. Changing may be advisable, for example, to reduce the brightness during nighttime hours. If change-over of the brightness via the object is required, the "LED night reduction" must be activated on the "General" parameter page. In this case the "Night reduction" communication object becomes visible in the ETS. As soon as a "1" telegram is received via this object, the push-button sensor switches over to the "Brightness of all status LEDs in night reduction" configured in the ETS ("LED night reduction" parameter page). If a "0" telegram is received via the object, the push-button sensor switches back to regular brightness.

The LED brightness is always changed gently by means of a brief dimming process. Dimming with a higher increment value results in quicker dimming than with dimming at a lower increment value. This results in a slow soft dimming that is pleasing for the human eye. The dimming speeds are fixed and therefore not changeable.

After a button has been actuated while night reduction is active, the illuminated LEDs of the device can be controlled to light up with regular brightness for 30 seconds. This behaviour can be activated or deactivated using the "Brightness increase for 30 seconds" parameter. Increasing the brightness, especially with significantly reduced brightness values or LEDs even switched off, permits status changes to be identified more easily (or identified at all) in night mode.

i In the ETS it is possible to perform configuration in accordance with the possible selection of required stage values for the regular and reduced brightness. No check is made whether a reduced brightness level is configured for the lower brightness level. This also makes it possible to use the object to switch over the object to larger brightness levels in comparison to the regular brightness. It is recommended, however, to set the brightness value for the night reduction lower than the regular brightness.

i After a device reset, the regular brightness for switched-on LEDs is always effective. Switch-over by night reduction will only take place when a telegram is written to the respective object after a reset.

i When the status LED is activated via the regular display function or via the superposed function, it is possible to let the status LED flash. During flashing the LEDs switch synchronously between the "switched-on" and "switched-off" states in the active brightness. This is not interpreted as a change of state of the display function, by means of which the brightness is therefore also not switched over automatically.

i When LED alarm signalling is active, the status LEDs of the push-button sensor always flash with the regular brightness. The push-button sensor automatically deactivates LED night reduction as long as LED alarm signalling is active and updates it when LED alarm signalling is switched off and the night reduction object still is at "1"-active.

14.3.1 Table of parameters

"General" parameter page

LED night reduction	Activated **Deactivated**
The LED night reduction can be enabled here. If night reduction is enabled, the ETS shows further parameters and another communication object.	

The following parameters are visible on the "LED night reduction" parameter page if LED night reduction has been activated.

Polarity of the night reduction object	**1 = active / 0 = not active** 0 = active / 1 = not active
The night reduction object is used as an input for activating or deactivating the LED night reduction. This object defines the polarity of the "Switching night reduction" object.	

Brightness of all status LEDs in night reduction	Level 0 (OFF) Level 1 (dark) **Level 2** Level 3 Level 4 Level 5 (bright)
The brightness of all status LEDs of the push-button sensor can be defined on the "General" parameter page. The illumination brightness of all LEDs with active night reduction can be set here in 6 levels.	

Increase brightness for 30 seconds	**Activated** Deactivated
After a button has been actuated while night reduction is active, the illuminated LEDs of the device can be controlled to light up with regular brightness for 30 seconds. This behaviour can be activated or deactivated using this parameter.	

Brightness of orientation lighting in night reduction	Level 0 (OFF) **Level 1 (dark)** Level 2 Level 3 Level 4 Level 5 (bright)
The brightness of orientation lighting can be defined on the "LED orientation lighting" parameter page. The illumination brightness of the LED orientation lighting with active night reduction can be set here in 6 levels.	

14.3.2 Object list

Function	Name	Type	DPT	Flag
Switching night reduction	LED night reduction - input	1-bit	1,001	C, -, W, -, U
1-bit object for activating or deactivating the night reduction (brightness of all LEDs changed). This makes it possible, for example, to reduce the brightness during nighttime hours to a value configured in the ETS ("1" = Night reduction ON; "0" = Night reduction OFF).				

14.4 Disabling function

Configuration

With the 1-bit communication object "Disabling", the operating areas of the push-button sensor can be partly or completely disabled. During a disable, the rockers or buttons can also temporarily execute other functions.

i An active disable applies only to the functions of the rockers or buttons. The functions of the status LED, scene function, temperature measurements and room humidity measurement are not affected by the disabling function.

i With LED alarm signalling configured, the alarm indication cannot be reset by a disabled button.

The disabling function and the pertaining parameters and communication objects are enabled if the parameter "Disabling function?" on the "General" parameter page is set to "Activated".

You can parameterise the polarity of the disabling object. In case of polarity inversion (disabled = 0 / enabled = 1), the disabling function is not activated immediately after a bus reset or after ETS programming (object value = "0"). There must first be an object update "0" until the disabling function will be activated. Telegram updates from "0" to "0" or from "1" to "1" on the "Disabling" object remain without effect.

i After a device reset, the disabling function is deactivated and must be activated via the bus.

Configuring the reaction during a disable

In an active disable, either all buttons of the device or only individual buttons may be affected by the disable. You can furthermore define in the ETS whether disabled buttons will not show any response when pressed or, alternatively, will behave like another button of the device. This can be used to limit the control function of the push-button sensor completely or partially.

The disabling function must be activated.

- Set the "Button assignment" parameter to "All buttons assigned".

  The disabling function affects all buttons. As soon as any button of the device is pressed while a disabling function is active, the push-button sensor executes the "behaviour when a disabling function is active".
- Set the "Button assignment" parameter to "Individual buttons assigned".

  The disabling function affects only the buttons that are assigned on the "Disable function" parameter page. As soon as one of the assigned buttons is pressed while a disabling function is active, the "Behaviour when a disabling function is active" for this button is executed. All other, non-disabled buttons respond normally when pressed.
- Set the parameter "Behaviour when a disabling function is active" to "No response when pressed".

The disabled buttons do not respond when pressed. The status LEDs of the disabled buttons remain off if the display function is configured to "Button-actuation display" or "Telegram acknowledgement".

- Set the parameter "Behaviour when a disabling function is active" to "No response when pressed like...". Also configure the parameters "All assigned left / right buttons behave like" and "All assigned top / bottom buttons behave like" to the required button number or to the required disabling function 1 or 2.

  All buttons assigned to the disabling function behave as defined in the parameters of the disabling function. Different or identical reference buttons can be configured separately for all the left / right and top / bottom operating buttons. The two disabling functions of the push-button sensor can also be configured as a reference button.
  The telegrams are transmitted to the bus via the communication objects of the specified reference buttons. The disabling functions 1 and 2 have separate communication objects. The status LEDs of the reference buttons are controlled according to their function. The status LEDs of the disabled buttons remain off if the display function is configured to "Button-actuation display" or "Telegram acknowledgement".

i If a button evaluation is taking place at the time of activation / deactivation of a disabling function, this function is aborted immediately and with it also the pertaining button function. It is first necessary to release all buttons before a new button function can be executed if so permitted by the state of disabling.

14.4.1 Table of parameters

"General" parameter page

Disabling function	Activated **Deactivated**
With this parameter, the disabling function of the push-button sensor can be centrally activated. If "activated", the ETS shows further communication object and parameters.	

"Disable function" parameter page

Polarity of disabling object	**1 = disable / 0 = enable** 0 = disable / 1 = enable
This parameter defines the value of the disabling object at which the disabling function is active.	

Button assignment	**All buttons assigned** Individual buttons assigned
"All buttons assigned": The disabling function affects all buttons. As soon as any button of the device is pressed while a disabling function is active, the "Behaviour when a disabling function is active" is executed. "Individual buttons assigned": The disabling function affects only the assigned buttons. As soon as one of the assigned buttons is pressed while a disabling function is active, the "Behaviour when a disabling function is active" for this button is executed. All other, non-disabled buttons respond normally when pressed.	

Assign button *n*?	Activated **Deactivated**
With the setting "Individual buttons assigned", these parameters define the assignment of the buttons to the disabling function.	

Behaviour when the disabling function is active	**No reaction to button-press** Reaction to a button-press like...
You can define here whether disabled buttons will not show any response when pressed or, alternatively, will behave like another button of the device or like a virtual disabling function. "No reaction to button-actuation": The disabled buttons do not respond when pressed. "Reaction to a button-press like...": All buttons assigned to the disabling function behave as defined in the parameters for the two specified reference buttons of the push-button sensor. Different or identical reference buttons can be configured separately for all the left and right operating buttons. The two virtual disabling functions of the push-button sensor can also be configured as a reference button. The telegrams are transmitted to the bus via the communication objects of the specified reference buttons.	

All assigned left buttons behave as	**Button 1** Button 2 ... (Selection depends on device variant!) Disabling function 1 Disabling function 2
If a specific button function is to be assigned during disabling to all or to individual buttons, this parameter can be used to select the desired button the function of which will then be executed. During disabling, all the left buttons behave like the one configured here. The desired functions can either correspond to the function of an existing button or they can be configured as special disabling functions. This parameter is only visible with "Behaviour when a disabling function is active = Reaction to a button-press like..." and "Installation position = standard installation position".	

All assigned right buttons behave as	**Button 1** Button 2 ... (Selection depends on device variant!) Disabling function 1 Disabling function 2
If a specific button function is to be assigned during disabling to all or to individual buttons, this parameter can be used to select the desired button the function of which will then be executed. During disabling, all the right buttons behave like the one configured here. The desired functions can either correspond to the function of an existing button or they can be configured as special disabling functions. This parameter is only visible with "Behaviour when a disabling function is active = Reaction to a button-press like..." and "Installation position = standard installation position".	

All assigned upper buttons behave as	**Button 1** Button 2 ... (Selection depends on device variant!) Disabling function 1 Disabling function 2
If a specific button function is to be assigned during disabling to all or to individual buttons, this parameter can be used to select the desired button the function of which will then be executed. During disabling, all assigned upper buttons behave like the one parameterized here. The desired functions can either correspond to the function of an existing button or they can be configured as special disabling functions. This parameter is only visible with "Behaviour when a disabling function is active = Reaction to a button-press like..." and "Installation position = turned by -90°".	

All assigned lower buttons behave as	**Button 1** Button 2 ... (Selection depends on device variant!) Disabling function 1 Disabling function 2
If a specific button function is to be assigned during disabling to all or to individual buttons, this parameter can be used to select the desired button the function of which will then be executed. During disabling, all assigned lower buttons behave like the one parameterised here. The desired functions can either correspond to the function of an existing button or they can be configured as special disabling functions. This parameter is only visible with "Behaviour when a disabling function is active = Reaction to a button-press like..." and "Installation position = turned by -90°".	

Parameter page "Disabling function -> Disabling function 1 / Disabling function 2"

The functions "Switching", "Dimming and colour temperature", "Colour control and brightness", "Shading", "Value transmitter", "Scene extension unit", "2-channel operation" and "Controller extension" are available for the two disabling functions. These functions behave like the button functions of the device (same parameters).

14.4.2 Object list

Function	Name	Type	DPT	Flag
Disabling	Disabling function - input	1-bit	1,002	C, -, W, -, -
1-bit object for transmission of switching telegrams (ON, OFF).				

Function: Switching

Function	Name	Type	DPT	Flag
Switching	Disabling function *n* - Output	1-bit	1,001	C, -, W, T, -
1-bit object for transmission of switching telegrams (ON, OFF).				

Function	Name	Type	DPT	Flag
Switching feedback	Disabling function *n* - Input	1-bit	1,001	C, -, W, -, U
1-bit object for receiving feedback telegrams (ON, OFF).				

Function: Dimming and colour temperature

Function	Name	Type	DPT	Flag
Switching	Disabling function *n* - Output	1-bit	1,001	C, -, W, T, -
1-bit object for transmission of switching telegrams (ON, OFF).				

Function	Name	Type	DPT	Flag
Dimming brightness	Disabling function *n* - Output	4-bit	1,007	C, -, W, T, -
4-bit object for the transmission of relative dimming telegrams.				

Function	Name	Type	DPT	Flag
Dimming brightness + colour temperature	Disabling function *n* - Output	3-byte	250,600	C, -, -, T, -
3-byte object for sending dimming telegrams for adjusting the brightness and the colour temperature in combination.				

Function	Name	Type	DPT	Flag
Switching feedback	Disabling function *n* - Input	1-bit	1,001	C, -, W, -, U
1-bit object for receiving feedback telegrams (ON, OFF).				

Function	Name	Type	DPT	Flag
Dimming colour temperature	Disabling function *n* - Output	4-bit	3,007	C, -, -, T, -
4-bit object for sending relative dimming telegrams to adjust the colour temperature.				

Function: Colour control and brightness

Function	Name	Type	DPT	Flag
Switching	Disabling function *n* - Output	1-bit	1,001	C, -, -, T, -
1-bit object for transmission of switching telegrams (ON, OFF).				

Function	Name	Type	DPT	Flag
Switching feedback	Disabling function *n* - Input	1-bit	1,001	C, -, W, -, U
1-bit object for receiving feedback telegrams (ON, OFF).				

Function	Name	Type	DPT	Flag
Colour value RGB	Disabling function *n* - Output	3-byte	232,600	C, -, -, T, -
3-byte object for transmitting the RGB colour values. This object is only visible with "Colour space = RGB" and "Communication = Combi object".				

Function	Name	Type	DPT	Flag
Colour value RGBW	Disabling function *n* - Output	6-byte	251,600	C, -, -, T, -
6-byte object for transmitting the RGBW colour values. This object is only visible with "Colour space = RGBW" and "Communication = Combi object"				

Function	Name	Type	DPT	Flag
Colour value Red	Disabling function *n* - Output	1-byte	5,001	C, -, -, T, -
1-byte object for transmitting the red colour value. This object is only visible with "Colour space = RGB or RGBW" and "Communication = Individual objects".				

Function	Name	Type	DPT	Flag
Colour hue (H)	Disabling function *n* - Output	1-byte	5,003	C, -, -, T, -
1-byte object for transmitting the colour hue. This object is only visible with "Colour space = HSV or HSVW".				

Function	Name	Type	DPT	Flag
Colour value Green	Disabling function *n* - Output	1-byte	5,001	C, -, -, T, -
1-byte object for transmitting the green colour value. This object is only visible with "Colour space = RGB or RGBW" and "Communication = Individual objects".				

Function	Name	Type	DPT	Flag
Saturation (S)	Disabling function *n* - Output	1-byte	5,001	C, -, -, T, -
1-byte object for transmitting the saturation. This object is only visible with "Colour space = HSV or HSVW".				

Function	Name	Type	DPT	Flag
Colour value Blue	Disabling function *n* - Output	1-byte	5,001	C, -, -, T, -
1-byte object for transmitting the blue colour value. This object is only visible with "Colour space = RGB or RGBW" and "Communication = Individual objects"				

Function	Name	Type	DPT	Flag
Brightness (V)	Disabling function *n* - Output	1-byte	5,001	C, -, -, T, -
1-byte object for transmitting the brightness value. This object is only visible with "Colour space = HSV or HSVW".				

Function	Name	Type	DPT	Flag
Colour value White	Disabling function *n* - Output	1-byte	5,001	C, -, -, T, -
1-byte object for transmitting the white colour value. This object is only visible with "Colour space = RGBW" and "Communication = Individual objects"				

Function	Name	Type	DPT	Flag
White value (W)	Disabling function *n* - Output	1-byte	5,001	C, -, -, T, -
1-byte object for transmitting the white level. This object is only visible with "Colour space = HSVW".				

Function	Name	Type	DPT	Flag
Colour value RGB feedback	Disabling function *n* - Input	3-byte	232,600	C, -, W, -, U
3-byte object for receiving feedback telegrams (RGB colour values). This object is only visible with "Colour space = RGB" and "Communication = Combi object"				

Function	Name	Type	DPT	Flag
Colour value RGBW feedback	Disabling function *n* - Input	6-byte	251,600	C, -, W, -, U
6-byte object for receiving feedback telegrams (RGBW colour values). This object is only visible with "Colour space = RGBW" and "Communication = Combi object"				

Function	Name	Type	DPT	Flag
Colour value Red feedback	Disabling function *n* - Input	1-byte	5,001	C, -, W, -, U
1-byte object for receiving feedback telegrams (red colour value). This object is only visible with "Colour space = RGB or RGBW" and "Communication = Individual objects"				

Function	Name	Type	DPT	Flag
Colour hue (H) feedback	Disabling function *n* - Input	1-byte	5,003	C, -, W, -, U
1-byte object for receiving feedback telegrams (colour hue H). This object is only visible with "Colour space = HSV or HSVW".				

Function	Name	Type	DPT	Flag
Colour value Green feedback	Disabling function *n* - Input	1-byte	5,001	C, -, W, -, U
1-byte object for receiving feedback telegrams (green colour value). This object is only visible with "Colour space = RGB or RGBW" and "Communication = Individual objects"				

Function	Name	Type	DPT	Flag
Saturation (S) feedback	Disabling function *n* - Input	1-byte	5,001	C, -, W, -, U
1-byte object for receiving feedback telegrams (saturation S). This object is only visible with "Colour space = HSV or HSVW".				

Function	Name	Type	DPT	Flag
Colour value Blue feedback	Disabling function *n* - Input	1-byte	5,001	C, -, W, -, U
1-byte object for receiving feedback telegrams (blue colour value). This object is only visible with "Colour space = RGB or RGBW" and "Communication = Individual objects"				

Function	Name	Type	DPT	Flag
Brightness (V) feedback	Disabling function *n* - Input	1-byte	5,001	C, -, W, -, U
1-byte object for receiving feedback telegrams (brightness value V). This object is only visible with "Colour space = HSV or HSVW".				

Function	Name	Type	DPT	Flag
Colour value White feedback	Disabling function *n* - Input	1-byte	5,001	C, -, W, -, U
1-byte object for receiving feedback telegrams (white colour value). This object is only visible with "Colour space = RGBW" and "Communication = Individual objects"				

Function	Name	Type	DPT	Flag
White level (W) feedback	Disabling function *n* - Input	1-byte	5,001	C, -, W, -, U
1-byte object for receiving feedback telegrams (white value W). This object is only visible with "Colour space = HSVW".				

Function: Shading

Function	Name	Type	DPT	Flag
Short-time operation	Disabling function *n* - Output	1-bit	1,008	C, -, -, T, -
1-bit object for the transmission of telegrams with which a venetian blind or shutter drive motor can be stopped or with which the blind slats can be adjusted by short time operation.				

Function	Name	Type	DPT	Flag
Long-time operation	Disabling function *n* - Output	1-bit	1,008	C, -, W, T, -
1-bit object for the transmission of telegrams with which a venetian blind or shutter drive motor can be can be moved upwards or downwards.				

Function: Value transmitter

Function	Name	Type	DPT	Flag
Value transmitter 0...255	Disabling function *n* - Output	1-byte	5,010	C, -, -, T, -
1-byte object for the transmission of values from 0 to 255.				

Function	Name	Type	DPT	Flag
Value transmitter 0… 100 %	Disabling function *n* - Output	1-byte	5,001	C, -, -, T, -
1-byte object for the transmission of values from 0 to 100%.				

Function	Name	Type	DPT	Flag
Value transmitter -128...127	Disabling function *n* - Output	1-byte	6,010	C, -, -, T, -
1-byte object for the transmission of values from -128 to 127.				

Function	Name	Type	DPT	Flag
Value transmitter 0… 255 %	Disabling function *n* - Output	1-byte	5,004	C, -, -, T, -
1-byte object for the transmission of values from 0 to 255%.				

Function	Name	Type	DPT	Flag
Value transmitter 0...65535	Disabling function *n* - Output	2-byte	7,001	C, -, -, T, -
2-byte object for the transmission of values from 0 to 65535.				

Function	Name	Type	DPT	Flag
Value transmitter -32768...32767	Disabling function *n* - Output	2-byte	8,001	C, -, -, T, -
2-byte object for the transmission of values from -32768 to 32767.				

Function	Name	Type	DPT	Flag
Temperature value transmitter	Disabling function *n* - Output	2-byte	9,001	C, -, -, T, -
2-byte object for transmitting temperature values from 0 to 40 °C.				

Function	Name	Type	DPT	Flag
Brightness value transmitter	Disabling function *n* - Output	2-byte	9,004	C, -, -, T, -
2-byte object for transmitting brightness values from 0 to 1500 Lux.				

Function	Name	Type	DPT	Flag
Colour temperature value transmitter	Disabling function *n* - Output	2-byte	7,600	C, -, -, T, -
2-byte object for transmitting colour temperature values from 1000 to 10000 Kelvin.				

Function	Name	Type	DPT	Flag
Colour value transmitter RGB	Disabling function *n* - Output	3-byte	232,600	C, -, -, T, -
3-byte object for transmitting the colour information red, green and blue in one communication object.				

Function	Name	Type	DPT	Flag
Colour value transmitter RGBW	Disabling function *n* - Output	6-byte	251,600	C, -, -, T, -
6-byte object for sending the colour information red, green, blue and white in one communication object.				

Function	Name	Type	DPT	Flag
Colour value transmitter Red	Disabling function *n* - Output	1-byte	5,001	C, -, -, T, -
1-byte object for transmitting the red colour value from 0 to 100 per cent.				

Function	Name	Type	DPT	Flag
Colour value transmitter Green	Disabling function *n* - Output	1-byte	5,001	C, -, -, T, -
1-byte object for transmitting the green colour value from 0 to 100 per cent.				

Function	Name	Type	DPT	Flag
Colour value transmitter Blue	Disabling function *n* - Output	1-byte	5,001	C, -, -, T, -
1-byte object for transmitting the blue colour value from 0 to 100 per cent.				

Function	Name	Type	DPT	Flag
Colour value transmitter White	Disabling function *n* - Output	1-byte	5,001	C, -, -, T, -
1-byte object for transmitting the white colour value from 0 to 100 per cent.				

Function	Name	Type	DPT	Flag
Colour hue (H)	Disabling function *n* - Output	1-byte	5,003	C, -, -, T, -
1-byte object for sending the colour hue (H) from 0 ... 360°.				

Function	Name	Type	DPT	Flag
Saturation (S)	Disabling function *n* - Output	1-byte	5,001	C, -, -, T, -
1-byte object for transmitting the saturation (S) from 0 to 100 per cent.				

Function	Name	Type	DPT	Flag
Brightness (V)	Disabling function *n* - Output	1-byte	5,001	C, -, -, T, -
1-byte object for transmitting the brightness (V) from 0 to 100 per cent.				

Function	Name	Type	DPT	Flag
White value (W)	Disabling function *n* - Output	1-byte	5,001	C, -, -, T, -
1-byte object for transmitting the white value (W) from 0 to 100 per cent.				

Function	Name	Type	DPT	Flag
Colour temperature value transmitter + brightness	Disabling function *n* - Output	6-byte	249,600	C, -, -, T, -
6-byte object for sending the time window, colour temperature and brightness.				

Function: Scene extension unit

Function	Name	Type	DPT	Flag
Scene extension unit	Disabling function *n* - Output	1-byte	18,001	C, -, -, T, -
1-byte object for recalling or for storing one of 64 scenes max. from a scene push-button sensor.				

Function: 2-channel operation

Function	Name	Type	DPT	Flag
Channel 1 switching	Disabling function *n* - Output	1-bit	1,001	C, -, W, T, U
1-bit object for transmitting switching telegrams on channel 1 if 2-channel operation is activated.				

Function	Name	Type	DPT	Flag
Channel 2 switching	Disabling function *n* - Output	1-bit	1,001	C, -, W, T, U
1-bit object for transmitting switching telegrams on channel 2 if 2-channel operation is activated.				

Function	Name	Type	DPT	Flag
Channel 1 value 0...255	Disabling function *n* - Output	1-byte	5,010	C, -, -, T, -
1-byte object for transmitting value telegrams on channel 1 if 2-channel operation is activated.				

Function	Name	Type	DPT	Flag
Channel 2 value 0...255	Disabling function *n* - Output	1-byte	5,010	C, -, -, T, -
1-byte object for transmitting value telegrams on channel 2 if 2-channel operation is activated.				

Function	Name	Type	DPT	Flag
Channel 1 value 0...100 %	Disabling function *n* - Output	1-byte	5,001	C, -, -, T, -
1-byte object for transmitting value telegrams on channel 1 if 2-channel operation is activated.				

Function	Name	Type	DPT	Flag
Channel 2 value 0...100 %	Disabling function *n* - Output	1-byte	5,001	C, -, -, T, -
1-byte object for transmitting value telegrams on channel 2 if 2-channel operation is activated.				

Function	Name	Type	DPT	Flag
Channel 1 value -128...127	Disabling function *n* - Output	1-byte	6,010	C, -, -, T, -
1-byte object for transmitting value telegrams on channel 1 if 2-channel operation is activated.				

Function	Name	Type	DPT	Flag
Channel 2 value -128...127	Disabling function *n* - Output	1-byte	6,010	C, -, -, T, -
1-byte object for transmitting value telegrams on channel 2 if 2-channel operation is activated.				

Function	Name	Type	DPT	Flag
Channel 1 value 0...255 %	Disabling function *n* - Output	1-byte	5,004	C, -, -, T, -
1-byte object for transmitting value telegrams on channel 1 if 2-channel operation is activated.				

Function	Name	Type	DPT	Flag
Channel 2 value 0...255 %	Disabling function *n* - Output	1-byte	5,004	C, -, -, T, -
1-byte object for transmitting value telegrams on channel 2 if 2-channel operation is activated.				

Function	Name	Type	DPT	Flag
Channel 1 value 0...65535	Disabling function *n* - Output	2-byte	7,001	C, -, -, T, -
2-byte object for transmitting value telegrams on channel 1 if 2-channel operation is activated.				

Function	Name	Type	DPT	Flag
Channel 2 value 0...65535	Disabling function *n* - Output	2-byte	7,001	C, -, -, T, -
2-byte object for transmitting value telegrams on channel 2 if 2-channel operation is activated.				

Function	Name	Type	DPT	Flag
Channel 1 value -32768...32767	Disabling function *n* - Output	2-byte	8,001	C, -, -, T, -
2-byte object for transmitting value telegrams on channel 1 if 2-channel operation is activated.				

Function	Name	Type	DPT	Flag
Channel 2 value -32768...32767	Disabling function *n* - Output	2-byte	8,001	C, -, -, T, -
2-byte object for transmitting value telegrams on channel 2 if 2-channel operation is activated.				

Function	Name	Type	DPT	Flag
Channel 1 temperature value	Disabling function *n* - Output	2-byte	9,001	C, -, -, T, -
2-byte object for transmitting temperature values on channel 1 if 2-channel operation is activated.				

Function	Name	Type	DPT	Flag
Channel 2 temperature value	Disabling function *n* - Output	2-byte	9,001	C, -, -, T, -
2-byte object for transmitting temperature values on channel 2 if 2-channel operation is activated.				

Function	Name	Type	DPT	Flag
Channel 1 brightness value	Disabling function *n* - Output	2-byte	9,004	C, -, -, T, -
2-byte object for transmitting brightness values on channel 1 if 2-channel operation is activated.				

Function	Name	Type	DPT	Flag
Channel 2 brightness value	Disabling function *n* - Output	2-byte	9,004	C, -, -, T, -
2-byte object for transmitting brightness values on channel 2 if 2-channel operation is activated.				

Function	Name	Type	DPT	Flag
Channel 1 colour value transmitter	Disabling function *n* - Output	2-byte	7,600	C, -, -, T, -
2-byte object for transmitting colour temperature values from 1000 to 10000 Kelvin on channel 1 if 2-channel operation is activated.				

Function	Name	Type	DPT	Flag
Channel 2 colour value transmitter	Disabling function *n* - Output	2-byte	7,600	C, -, -, T, -
2-byte object for transmitting colour temperature values from 1000 to 10000 Kelvin on channel 2 if 2-channel operation is activated.				

Function	Name	Type	DPT	Flag
Channel 1 colour value transmitter RGB	Disabling function *n* - Output	3-byte	232,600	C, -, -, T, -
3-byte object for transmitting the colour information red, green and blue in a communication object on channel 1 if 2-channel operation is activated.				

Function	Name	Type	DPT	Flag
Channel 2 colour value transmitter RGB	Disabling function *n* - Output	3-byte	232,600	C, -, -, T, -
3-byte object for transmitting the colour information red, green and blue in a communication object on channel 2 if 2-channel operation is activated.				

Function	Name	Type	DPT	Flag
Channel 1 colour value transmitter RGBW	Disabling function *n* - Output	6-byte	251,600	C, -, -, T, -
6-byte object for transmitting the colour information red, green, blue and white in a communication object on channel 1 if 2-channel operation is activated.				

Function	Name	Type	DPT	Flag
Channel 2 colour value transmitter RGBW	Disabling function *n* - Output	6-byte	251,600	C, -, -, T, -
6-byte object for transmitting the colour information red, green, blue and white in a communication object on channel 2 if 2-channel operation is activated.				

Function	Name	Type	DPT	Flag
Channel 1 colour value transmitter Red	Disabling function *n* - Output	1-byte	5,001	C, -, -, T, -
1-byte object for transmitting the colour value red from 0 to 100 per cent on channel 1 if 2-channel operation is activated.				

Function	Name	Type	DPT	Flag
Channel 2 colour value transmitter Red	Disabling function *n* - Output	1-byte	5,001	C, -, -, T, -
1-byte object for transmitting the colour value red from 0 to 100 per cent on channel 2 if 2-channel operation is activated.				

Function	Name	Type	DPT	Flag
Channel 1 colour value transmitter Green	Disabling function *n* - Output	1-byte	5,001	C, -, -, T, -
1-byte object for transmitting the colour value green from 0 to 100 per cent on channel 1 if 2-channel operation is activated.				

Function	Name	Type	DPT	Flag
Channel 2 colour value transmitter Green	Disabling function *n* - Output	1-byte	5,001	C, -, -, T, -
1-byte object for transmitting the colour value green from 0 to 100 per cent on channel 2 if 2-channel operation is activated.				

Function	Name	Type	DPT	Flag
Channel 1 colour value transmitter Blue	Disabling function *n* - Output	1-byte	5,001	C, -, -, T, -
1-byte object for transmitting the colour value blue from 0 to 100 per cent on channel 1 if 2-channel operation is activated.				

Function	Name	Type	DPT	Flag
Channel 2 colour value transmitter Blue	Disabling function *n* - Output	1-byte	5,001	C, -, -, T, -
1-byte object for transmitting the colour value blue from 0 to 100 per cent on channel 2 if 2-channel operation is activated.				

Function	Name	Type	DPT	Flag
Channel 1 colour value transmitter White	Disabling function *n* - Output	1-byte	5,001	C, -, -, T, -
1-byte object for transmitting the colour value white from 0 to 100 per cent on channel 1 if 2-channel operation is activated.				

Function	Name	Type	DPT	Flag
Channel 2 colour value transmitter White	Disabling function *n* - Output	1-byte	5,001	C, -, -, T, -
1-byte object for transmitting the colour value white from 0 to 100 per cent on channel 2 if 2-channel operation is activated.				

Function	Name	Type	DPT	Flag
Channel 1 colour hue (H)	Disabling function *n* - Output	1-byte	5,003	C, -, -, T, -
1-byte object for sending the colour hue (H) from 0 ... 360° on channel 1 if 2-channel operation is activated.				

Function	Name	Type	DPT	Flag
Channel 2 colour hue (H)	Disabling function *n* - Output	1-byte	5,003	C, -, -, T, -
1-byte object for sending the colour hue (H) from 0 ... 360° on channel 2 if 2-channel operation is activated.				

Function	Name	Type	DPT	Flag
Channel 1 saturation (S)	Disabling function *n* - Output	1-byte	5,001	C, -, -, T, -
1-byte object for transmitting the saturation (S) from 0 to 100 per cent on channel 1 if 2-channel operation is activated.				

Function	Name	Type	DPT	Flag
Channel 2 saturation (S)	Disabling function *n* - Output	1-byte	5,001	C, -, -, T, -
1-byte object for transmitting the saturation (S) from 0 to 100 per cent on channel 2 if 2-channel operation is activated.				

Function	Name	Type	DPT	Flag
Channel 1 brightness (V)	Disabling function *n* - Output	1-byte	5,001	C, -, -, T, -
1-byte object for transmitting the brightness value (V) from 0 to 100 per cent on channel 1 if 2-channel operation is activated.				

Function	Name	Type	DPT	Flag
Channel 2 brightness (V)	Disabling function *n* - Output	1-byte	5,001	C, -, -, T, -
1-byte object for transmitting the brightness value (V) from 0 to 100 per cent on channel 2 if 2-channel operation is activated.				

Function	Name	Type	DPT	Flag
Channel 1 white level (W)	Disabling function *n* - Output	1-byte	5,001	C, -, -, T, -
1-byte object for transmitting the white value (W) from 0 to 100 per cent on channel 1 if 2-channel operation is activated.				

Function	Name	Type	DPT	Flag
Channel 2 white level (W)	Disabling function *n* - Output	1-byte	5,001	C, -, -, T, -
1-byte object for transmitting the white value (W) from 0 to 100 per cent on channel 2 if 2-channel operation is activated.				

Function	Name	Type	DPT	Flag
Channel 1 colour value transmitter + brightness	Disabling function *n* - Output	6-byte	249,600	C, -, -, T, -
6-byte object for transmitting the time window, colour temperature and brightness on channel 1 if 2-channel operation is activated.				

Function	Name	Type	DPT	Flag
Channel 2 colour value transmitter + brightness	Disabling function *n* - Output	6-byte	249,600	C, -, -, T, -
6-byte object for transmitting the time window, colour temperature and brightness on channel 2 if 2-channel operation is activated.				

Function	Name	Type	DPT	Flag
Channel 1 scene (external) 1…64	Disabling function *n* - Output	1-byte	18,001	C, -, -, T, -
1-byte object for transmitting scene values on channel 1 if 2-channel operation is activated.				

Function	Name	Type	DPT	Flag
Channel 2 scene (external) 1…64	Disabling function *n* - Output	1-byte	18,001	C, -, -, T, -
1-byte object for transmitting scene values on channel 2 if 2-channel operation is activated.				

Function: controller extension

Function	Name	Type	DPT	Flag
Operating mode switchover	Disabling function *n* - controller extension - output	1-byte	20,102	C, -, W, T, -
1-byte object for switching a room temperature controller between the Comfort, Standby, Night and Frost/heat protection operating modes. This object is only visible if "Functionality = operating mode switchover".				

Function	Name	Type	DPT	Flag
Operating mode switchover feedback	Disabling function *n* - controller extension - input	1-byte	20,102	C, -, W, -, U
1-byte object for receiving the operating mode of a room temperature controller. This object is only visible if "Functionality = operating mode switchover".				

Function	Name	Type	DPT	Flag
Operating mode forced-control	Disabling function *n* - controller extension - output	1-byte	20,102	C, -, W, T, -
1-byte object for switching a room temperature controller under forced control between the Automatic, Comfort, Standby, Night and Frost / heat protection operating modes. This object is only visible if "Functionality = forced operating mode switchover".				

Function	Name	Type	DPT	Flag
Forced object operating mode feedback	Disabling function *n* - controller extension - input	1-byte	20,102	C, -, W, -, U
1-byte object for receiving the operating mode of a room temperature controller. This object is only visible if "Functionality = operating mode switchover".				

Function	Name	Type	DPT	Flag
Presence function	Disabling function *n* - controller extension - output	1-bit	1,018	C, -, W, T, -
1-bit object for changing over the presence status of a room temperature controller. This object is only visible if "Functionality = presence function".				

Function	Name	Type	DPT	Flag
Presence function feedback	Disabling function *n* - controller extension - input	1-bit	1,018	C, -, W, -, U
1-bit object for receiving the presence status of a room temperature controller. This object is only visible if "Functionality = presence function".				

Function	Name	Type	DPT	Flag
Preset setpoint shifting	Disabling function *n* - controller extension - output	2-byte	9,002	C, -, W, T, -
2-byte object for presetting a basic setpoint shift in Kelvin. The value "0" means that no shift is active . Values can be specified between -670760 K and 670760 K. This object is only visible if "Function = Setpoint shift" and "Type of setpoint shift = Via offset (DPT 9.002)".				

Function	Name	Type	DPT	Flag
Current setpoint shifting	Disabling function *n* - controller extension - input	2-byte	9,002	C, -, W, -, U
2-byte object for receiving the feedback from the current basic setpoint shift in Kelvin. This object is only visible if "Function = Setpoint shift" and "Type of setpoint shift = Via offset (DPT 9.002)".				

Function	Name	Type	DPT	Flag
Preset setpoint shifting	Disabling function *n* - controller extension - output	1-byte	6,010	C, -, W, T, -
1-byte object for presetting a basic setpoint shift. The value "0" means that no shift is active . The value is depicted in a two's complement in the positive or negative direction. This object is only visible if "Function = Setpoint shift" and "Type of setpoint shift = Via levels (DPT 6.010)".				

Function	Name	Type	DPT	Flag
Current setpoint shifting	Disabling function *n* - controller extension - input	1-byte	6,010	C, -, W, -, U
1-byte object for receiving the feedback from the current basic setpoint shift. This object is only visible if "Function = Setpoint shift" and "Type of setpoint shift = Via levels (DPT 6.010)".				

14.5 Scene function

Scene control

The push-button sensor can be used in two different ways as part of a scene control system:

- Each rocker or button can work as a scene extension unit. This feature makes it possible to recall or to store scenes which may be stored in other devices .
- The push-button sensor can independently store up to eight scenes with eight actuator groups. These internal scenes can be recalled or stored by the rockers or buttons (internal scene recall) and also by the "extension unit" communication object.
  In the following subsections the internal scene function will be dealt with in greater detail.

Scene definition and scene recall

If the internal scenes are to be used, the "Scene function" parameter on the "General" parameter page must be set to "Activated". When the scene function is activated, the ETS automatically shows the "Scene function" parameter page. The matching data types for the eight scene outputs must then be selected on the "Scene data types" parameter page and adapted to the actuator groups used. The following types are available for selection:

- Switching
- Value (0…255)
- Value / Venetian blind position (0…100%)
- Colour temperature value
- Colour value RGB/HSV
- Colour value RGBW/HSVW

i As a rule, Venetian blinds are controlled via two scene outputs. One output controls the blind height and the other one adjusts the slat position.

The ETS sets the corresponding communication objects and the parameters of the scene commands on the following parameter pages "Scene 1" to "Scene 8".

It is possible that the values for the individual scenes preset by the parameters are modified later on with the storage function (see chapter "Scene function" ▸ Page 161) when the system is in operation. If the application program is then loaded again with the ETS, these locally adapted values will normally be overwritten by the parameters. Due to the fact that it may take considerable efforts to readjust the values for all scenes in the system, the parameter "Overwrite scene values during ETS download ?" offers the possibility of retaining the scene values stored in operation.

The scene parameters can be set on the parameter page of each individual scene ("Scene 1 ... 8"). The setting options are the same for all 8 scenes.

These internal scenes can be recalled directly via the rockers or buttons (function "recall internal scene") and also by another bus device via the "extension unit" communication object. This 1-byte communication object supports the evaluation of up to 64 scene numbers. For this reason, it must be specified in ETS which of the external scene numbers (1 … 64) is to recall the internal scene (1 … 8). If the same scene number is listed for several internal scenes, it is always only the first of these scenes that will be activated (scene with the lowest scene number).

In some situations there may be the requirement that a group of actuators is not controlled by all, but only by certain scenes. A classroom, for instance, may require open blinds for the "Welcome" and "Break" scenes, closed blinds in the "PC presentation" scene and no change in the "Discussion" scene. In this example, the parameter "Permit transmission ?" can be set to "No" for the "Discussion" scene. The scene output is then deactivated during the corresponding scene.

The parameter "Transmit delay" permits entering an individual waiting time for each scene output. This transmit delay can be used in different situations:

- When the actuators participating in a scene transmit status messages automatically or when several scene buttons are used to increase the number of channels within the scenes, the recall of a scene may result for a short time in high bus loading. The transmit delay helps to reduce the bus load at the time of scene recall.
- Sometimes, it is desirable that an action is started only after another action has ended. This can be for instance the illumination which is to shut off only after the blinds/shutters have been raised.

The transmit delay can be set separately for each scene output. The transmit delay defines the time delay between the individual telegrams during a scene recall. The setting specifies how much time must pass after the first scene telegram before the second is transmitted. After transmission of the second scene telegram, the configured time must again pass before the third is transmitted. The delay continues as follows for each additional scene telegram. The transmit delay for the first scene telegram starts immediately after the scene has been recalled.

The transmit delay between telegrams can also be deactivated (setting "0"). The telegrams are then transmitted at the shortest possible time interval. In this case, however, the order of the telegrams transmitted can deviate from the numbering of the scene outputs.

i When a new scene recall (also with the same scene number) occurs during a current scene recall - even in consideration of the pertaining transmit delays - the scene processing started first will be aborted and the newly received scene number will be processed. A running scene is also aborted when a scene is being stored!

i During a scene recall - even if delayed - the operating areas of the push-button sensor are normally operational.

Storing scenes

For each output of a scene, the user can define a corresponding scene value in the ETS which is then transmitted to the bus during a scene recall. During the ongoing operation of the system it may be necessary to adapt these preset values and to save the adapted values in the push-button sensor. This can be ensured by the storage function of the scene control.

The value storage function for the corresponding scene number is enabled with the parameter "Permit storing ?" enabled ("Yes") or disabled ("No"). When the storage function is disabled, the object value of the corresponding output is not sampled during storage.

A scene storage process can be initiated in two different ways:

- By long rocker or button actuation of an operating element configured as "scene extension unit",
- By a storage telegram to the extension object.

During a storage process, the push-button sensor reads the current object values of the connected actuators. This is carried out by means of eight read telegrams (ValueRead) addressed to the devices in the scene which return their own value (ValueResponse) as a reaction to the request. The returned values are received by the push-button sensor and taken over permanently into the scene memory. Per scene output, the push-button sensor waits one second for a response. If no answer is received during this time, the value for this scene output remains unchanged and the push-button sensor scans the next output.

In order to enable the push-button sensor to read the object value of the actuator addressed when a scene is stored, the read flag of the corresponding actuator object must be set. This should be done only for one actuator out of an actuator group so that the value response is unequivocal.

The stored values overwrite those programmed into the push-button sensor with the ETS.

The storage process will always be executed completely by the push-button sensor and cannot not be aborted before it has ended. Recalling scenes in the course of a storage process is not possible, the operating areas of the pushbutton sensor remaining nevertheless normally operational.

14.5.1 Table of parameters

"General" parameter page

Scene function	Activated **Deactivated**
The device can internally handle eight scenes with eight actuator groups. This parameter activates the scene function and the other parameters and communication objects, if needed.	

"Scene function -> Scene data types" parameter page

Overwrite scene values during ETS download?	**Yes** No
If the values of the actuator groups that have been changed on site by the user are to be reset to the values preset in the ETS during an application download by the ETS, the setting "Yes" must be chosen. If "No" is selected, the ETS values will not overwrite the scene values stored in the push-button sensor, if any.	

Scene output *n*	**Switching** Value (0…255) Value / Venetian blind position (0…100%) Colour temperature value Colour value RGB/HSV Colour value RGBW/HSVW
The push-button sensor has an independent communication object for each of the eight actuator groups. With these parameters, the object type can be set separately for each output.	

Colour space	**RGB** HSV
This parameter defines the colour space when the scene output executes the "Colour value RGB/HSV" function. With RGB, communication can take place via individual objects or via a combination object. With HSV, communication takes place via individual objects.	

Communication	**Individual objects** Combi object
When the colour space is set to RGB, communication via the bus can take place either via individual objects (red, green, blue) or via a combination object (RGB).	

Colour space	**RGBW** HSVW
This parameter defines the colour space when the scene output executes the "Colour value RGBW/HSVW" function. With RGBW, communication can take place via individual objects or via a combination object. With HSVW, communication takes place via individual objects. This parameter is only visible if "Value range = 6-byte colour value RGBW/HSVW"	

Communication	**Individual objects** Combi object
When the colour space is set to RGBW, communication via the bus can take place either via individual objects (red, green, blue, white) or via a combination object (RGBW).	

"Scene function -> Scene *n*" parameter page

Name of scene *n*	Scene *n* Max. 40 characters long text
This parameter gives the scene a name for identification. The name serves merely as an aid in the ETS and is not programmed into the device.	

Scene number for scene *n*	**1** ... 64
If the internal scenes are to be recalled via the extension object, a definite number is required for each of them. This parameter serves to specify the extension number of the first scene. If several internal scenes have the same scene number, only the first scene with this number can be called up.	

The following parameters must be set on each "Scene n" parameter page for scene outputs 1 to 8, depending on the selected data type.

Switching command	**ON** OFF
This parameter can be used to predefine the switching command of the first scene output. This parameter is only visible if "Data types scene output 1 = switching"!	

Value (0 … 255)	**0**...255
This parameter can be used to predefine the value of the first scene output. This parameter is only visible if "Data types scene output 1 = value (0 … 255)"!	

Value / Venetian blind position (0 … 100 %)	**0**...100
This parameter can be used to predefine the value of the first scene output. This parameter is only visible if "Data types scene output 1 = value / Venetian blind position (0 … 100%)"!	

Colour temperature (1000, 1100, ..., 10000 K)	1000, 1100, ..., **2700**, ..., 10000
This parameter can be used to predefine the value of the first scene output. This parameter is only visible if "Data types scene output 1 = colour temperature value"!	

Value (RGB/HSV)	#000000 ... **#FFFFFF**
This parameter can be used to predefine the value of the first scene output. The value (RGB/HSV) is configured by means of a colour picker. This parameter is only visible if "Data types scene output 1 = colour value RGB/HSV" and "Data types scene output 1 = colour value RGBW/HSVW"! With "Data types scene output 1 = colour value RGBW/HSVW", the W-value is configured using a separate slider.	

Value (W)	**0** ... 255
This parameter can be used to predefine the value of the first scene output. This parameter is only visible if "Data types scene output 1 = colour value RGBW/HSVW"!	

Allow save?	**Activated** Deactivated
If the user is to be given the possibility of changing the value of the actuator group (scene output) within this scene and of storing it during regular operation, this parameter must be set to "activated".	

Allow transmission?	**Activated** Deactivated
If the state of an actuator group is to remain unchanged during the recall of a scene, this parameter can be set to "deactivated". In this case, the push-button sensor does not transmit a telegram via the scene output concerned during the recall of the scene. The scene output is deactivated for this scene.	

Transmission delay	**0**...120000
When the push-button sensor sends the telegrams to the various scene outputs, it can insert a settable waiting time of 2 min. max. before each telegram. This parameter sets the time in 100 millisecond increments. This can be used to reduce bus loading, but also to have certain lamps switched on only after the shutters are really closed. If no delay is selected ("0"), the push-button sensor sends the output telegrams with maximum speed. With this setting it may happen in some cases that the telegram sequence is not compatible with output numbering.	

14.5.2 Object list

The following communication objects are available for the individual scene outputs, depending on the set data type. The name of the object can be specified by the parameter "Name of ..." parameter.

Function	Name	Type	DPT	Flag
Extension unit	Scenes - Input	1-byte	18,001	C, -, W, -, U
1-byte object for recalling or for storing one of 64 scenes max. from a scene push-button sensor.				

Function	Name	Type	DPT	Flag
Switching	Scene - Scene output *n*	1-bit	1,001	C, -, W, T, U
1-bit objects for controlling up to eight actuator groups (ON, OFF).				

Function	Name	Type	DPT	Flag
Value (0...255)	Scene - Scene output *n*	1-byte	5,010	C, -, W, T, U
1-byte objects for controlling up to eight actuator groups (0…255).				

Function	Name	Type	DPT	Flag
Value / Venetian blind position (0...100 %)	Scene - Scene output *n*	1-byte	5,001	C, -, W, T, U
1-byte object with which one of the eight internally stored scenes can be recalled or stored again.				

Function	Name	Type	DPT	Flag
Colour temperature value	Scene - Scene output *n*	2-byte	7,600	C, -, W, T, U
2-byte object for transmitting colour temperature values from 1000 to 10000 Kelvin, with which one of the eight internally stored scenes can be recalled or stored again.				

Function	Name	Type	DPT	Flag
Colour value RGB	Scene - Scene output *n*	3-byte	232,600	C, -, W, T, U
3-byte object for transmitting the colour information red, green and blue in one communication object, with which one of the eight internally stored scenes can be recalled or stored again.				

Function	Name	Type	DPT	Flag
Colour value RGBW	Scene - Scene output *n*	6-byte	251,600	C, -, W, T, U
6-byte object for transmitting the colour information red, green, blue and white in one communication object, with which one of the eight internally stored scenes can be recalled or stored again.				

Function	Name	Type	DPT	Flag
Colour value Red	Scene - Scene output *n*	1-byte	5,001	C, -, W, T, U
1-byte object for transmitting the red colour value from 0 to 100 per cent, with which one of the eight internally stored scenes can be recalled or stored again.				

Function	Name	Type	DPT	Flag
Colour value Green	Scene - Scene output *n*	1-byte	5,001	C, -, W, T, U
1-byte object for transmitting the green colour value from 0 to 100 per cent, with which one of the eight internally stored scenes can be recalled or stored again.				

Function	Name	Type	DPT	Flag
Colour value Blue	Scene - Scene output *n*	1-byte	5,001	C, -, W, T, U
1-byte object for transmitting the blue colour value from 0 to 100 per cent, with which one of the eight internally stored scenes can be recalled or stored again.				

Function	Name	Type	DPT	Flag
Colour value White	Scene - Scene output *n*	1-byte	5,001	C, -, W, T, U
1-byte object for transmitting the white colour value from 0 to 100 per cent, with which one of the eight internally stored scenes can be recalled or stored again.				

Function	Name	Type	DPT	Flag
Colour hue (H)	Scene - Scene output *n*	1-byte	5,003	C, -, W, T, U
1-byte object for sending the colour hue (H) from 0 ... 360°, with which one of the eight internally stored scenes can be recalled or stored again.				

Function	Name	Type	DPT	Flag
Saturation (S)	Scene - Scene output *n*	1-byte	5,001	C, -, W, T, U
1-byte object for transmitting the saturation (S) from 0 to 100 per cent, with which one of the eight internally stored scenes can be recalled or stored again.				

Function	Name	Type	DPT	Flag
Brightness (V)	Scene - Scene output *n*	1-byte	5,001	C, -, W, T, U
1-byte object for transmitting the brightness value (V) from 0 to 100 per cent, with which one of the eight internally stored scenes can be recalled or stored again.				

Function	Name	Type	DPT	Flag
White value (W)	Scene - Scene output *n*	1-byte	5,001	C, -, W, T, U
1-byte object for transmitting the white value (W) from 0 to 100 per cent, with which one of the eight internally stored scenes can be recalled or stored again.				

14.6 Temperature measurement

Basic principles

The push-button sensor possesses an integrated temperature sensor, using which the room temperature can be detected. Alternatively (e.g. if the push-button sensor has been installed in an unfavourable location or in case of operation in difficult conditions, for example, in a moist atmosphere) or additionally (e.g. in large rooms or halls), a second, wired remote sensor or an external sensor linked via bus telegrams can be used to determine the actual value.

Temperature measurement is activated on the "General" parameter page and configured on the "Temperature measurement" parameter page. The device offers up to two temperature measurements, depending on the project design of the "Room temperature measurement by" parameter.
The room temperature measurement ("Room temperature measurement" parameter page) is the first temperature measurement. The room temperature measurement is always available if temperature measurement has been activated on the "General" parameter page.
The second temperature measurement is referred to as the 'further temperature measurement'. The further temperature measurement can be performed by the wired remote sensor, unless the wired remote sensor is already used for room temperature measurement.

When choosing the installation location for the push-button sensor or the external sensors, the following points should be considered:

- The push-button sensor or temperature sensor should not be used in multiple combinations, especially together with flush-mounted dimmers.
- Do not install the temperature sensor in the area of large electrical consumers (avoid heat influences).
- Installation in the vicinity of radiators or cooling systems is not advisable.
- The temperature sensor should not be exposed to direct sunlight.
- The installation of sensors on the inside of an outside wall might have a negative impact on the temperature measurement.
- Temperature sensors should be installed at least 30 cm away from doors, windows or ventilation devices and at least 1.5 m above the floor.

Temperature measurement and measured value determination

The push-button sensor features an integrated temperature sensor. This temperature sensor can be used to measure the ambient temperature and forward it to a room temperature controller via the 2-byte object "Actual temperature".

The room temperature measurement can optionally be complemented with a wired remote sensor or an external sensor. The wired remote sensor is connected to the device connection terminal for the remote sensor Device components. The external sensor is linked to the device (for example an additional push-button sensor or a KNX room temperature controller) via the bus by means of the additional 2-byte com-

munication object "External sensor". The push-button sensor offers another temperature measurement by the wired sensor, unless the wired sensor is already used for room temperature measurement.

The "Room temperature measurement by" parameter in the "Temperature measurement -> Room temperature measurement" parameter node specifies the sensors to detect the room temperature. The following settings are possible:

– "Internal sensor"

  The temperature sensor integrated in the push-button sensor is activated. Thus, the actual temperature value is determined only locally on the device.

  The wired sensor can be used for another temperature measurement.

– "Internal and wired sensor"

  With this setting the internal as well as the wired temperature sensor is active. The wired sensor must be a temperature sensor (see accessories).
  When evaluating the internal and the wired sensors, the real actual temperature is made up from the two measured temperature values. The weighting of the temperature values is defined by the "Creation of measuring value internal against wired" parameter. Depending on the different locations of the sensors or a possible non-uniform heat distribution inside the room, it is thus possible to adjust the actual temperature measurement. Often, those temperature sensors that are subject to negative external influences (for example unfavourable location due to exposure to sunlight, heater or door/window directly next to it) are weighted less heavily.

  The wired sensor cannot be used for another temperature measurement.

– "internal and external temperature sensor"

  With this setting the internal as well as the external temperature sensor is active. The external sensor must either be a KNX room temperature controller coupled via the "External sensor" 2-byte object or another bus device with temperature detection.
  When evaluating the internal and the external sensors, the real actual temperature is made up from the two measured temperature values. The weighting of the temperature values is defined by the "Creation of measuring value internal against external" parameter. Depending on the different locations of the sensors or a possible non-uniform heat distribution inside the room, it is thus possible to adjust the actual temperature measurement. Often, those temperature sensors that are subject to negative external influences (for example unfavourable location due to exposure to sunlight, heater or door/window directly next to it) are weighted less heavily.

  The wired sensor can be used for another temperature measurement.

Example:

The push-button sensor has been installed next to the entrance door (internal sensor). An additional external temperature sensor has been mounted on an inner wall in the middle of the room below the ceiling.

Internal sensor: 21.5 °C
External sensor: 22.3 °C
Measured value formation: 30% to 70%

-> TResult internal = T internal · 0.3 = 6.45 °C,
-> TResult external = Texternal = 22.3 °C · 0.7 = 15.61 °C
-> TResult actual = TResult internal + TResult external = 22.06 °C

Transmission of the temperature

The temperatures determined by room temperature measurement and by the further temperature measurement can be transmitted to the bus using the 2-byte objects "Actual temperature" or "Wired sensor" respectively.

The parameters "Transmission after room temperature change by" in the parameter node "Temperature measurement -> Room temperature measurement" or "Transmission after temperature change by" in the parameter node "Temperature measurement -> Further temperature measurement" define the temperature values by which the actual value of the respective temperature measurement has to change for the actual value to be automatically transmitted via the objects "Actual temperature" or "Wired sensor". Possible temperature value changes lie within a range of 0.1 K and 25.5 K. The "0" setting here deactivates the automatic transmission of the actual temperature.

Additionally, the determined temperatures for the room temperature measurement or further temperature measurement can be transmitted cyclically. The "Cyclical transmission of ..." parameters define the cycle time (1 to 255 minutes). The value "0" will deactivate the cyclical transmission of actual values.
Setting the "Read" flag on the "Actual temperature" and "Wired sensor" objects make it possible to read out the current actual values at any time over the bus. It has to be pointed out that with deactivated cyclical transmission and deactivated automatic transmission, no more temperature telegrams will be transmitted in case of changes!

Calibrating the measured values

In some cases, it may be necessary to calibrate the individual temperature values when measuring the room temperature. Calibration will become necessary, for example, if the temperature measured by the sensors stays permanently below or above the actual temperature in the vicinity of the sensor. To determine the temperature deviation, the actual room temperature should be determined by a reference measurement using a calibrated temperature measuring device.

The "Calibration" parameters can be used to parameterize the positive (temperature increase between 0.1 and 12.7 K) or negative (temperature decrease between –12.8 and –0.1 K) temperature calibration in 0.1 K increments. Thus, the calibration is set statically only once.

i The measured value has to be increased if the value measured by the sensor lies below the actual room temperature. The measured value must be decreased if the value measured by the sensor lies above the actual room temperature.

The "Actual temperature" object is always used to transmit the adjusted temperature value to the bus.
When determining the measured value with combined sensors, both calibrated values are used to calculate the actual value.

14.6.1 Table of parameters

"General" parameter page

Temperature measurement	Activated **Deactivated**
This parameter activates the temperature measurement. Additional parameters and objects become visible.	

"Temperature measurement -> Room temperature measurement" parameter page

Name of the room temperature measurement	Room temperature measurement Max. 40 characters long text
This parameter gives the room temperature measurement a name for identification. The name serves merely as an aid in the ETS and is not programmed into the device.	

Room temperature measurement using	Internal sensor Internal and wired sensor internal and external sensor (external = via communication object)
The "Room temperature measurement using" parameter specifies the sensors to detect the room temperature. "internal temperature sensor": The temperature sensor integrated in the push-button sensor is activated. Thus, the actual temperature value is determined only locally on the device. In this configuration, the feedback control will start directly after a device reset. "internal and wired sensor" or "internal and external sensor": These settings are used to combine the selected temperature sources. The sensors can be either a wired remote sensor directly connected to the controller, or KNX room temperature controllers connected via the "External sensor" 2-byte object, or controller extensions with temperature detection.	

Determination of measured value from internal to wired	10% to 90% 20% to 80% 30% to 70% 40% to 60% **50% to 50%** 60% to 40% 70% to 30% 80% to 20% 90% to 10%
The weighting of the measured temperature value for the internal and wired sensors is specified here. This results in an overall measured value, which is drawn on for the further evaluation of the room temperature. This parameter is only visible with "Room temperature measurement using = internal and wired sensor"!	

Determination of measured value from internal / external ratio	10% to 90% 20% to 80% 30% to 70% 40% to 60% **50% to 50%** 60% to 40% 70% to 30% 80% to 20% 90% to 10%
The weighting of the measured temperature value for the internal and external sensors is specified here. This results in an overall measured value, which is drawn on for the further evaluation of the room temperature. This parameter is only visible with "Room temperature measurement using = internal and external sensor (external = via communication object)"!	

Transmit when room temperature changes by	0...**0.2**...25.5
Determines the size of the value change of the room temperature in Kelvin after which the current value is automatically transmitted to the bus via the "Actual temperature" object. If set to "0", the actual value will be transmitted to the bus, regardless of the change in room temperature.	

Cyclical transmission of room temperature	0...**15**...255
This parameter specifies whether and at what time in minutes the determined room temperature is to be periodically output via the "Actual temperature" object. If the setting is "0", the current room temperature will not be transmitted cyclically to the bus.	

Calibration	-12.8...**0**...12.7
Determines the value in Kelvin by which the sensor's measured value is adjusted. This parameter is provided for the internal sensor and the wired sensor.	

"Temperature measurement -> Further temperature measurement" parameter page

The following parameters are visible if the "Room temperature measurement using" parameter is not set to "internal and wired sensor".

Name of the further temperature measurement	Further temperature measurement Max. 40 characters long text
This parameter gives the further temperature measurement a name for identification. The name serves merely as an aid in the ETS and is not programmed into the device.	

Temperature measurement via the wired sensor	Activated **Deactivated**
This parameter activates the temperature measurement that can be performed by the wired sensor in addition to the room temperature measurement. The additional temperature measurement is exclusively performed by the wired sensor.	

Transmission when room temperature change by	0...**0.2**...25.5
Determines the size of the value change of the wired sensor temperature in Kelvin after which the current value is automatically transmitted to the bus via the "Wired sensor" object. If set to "0", the actual value will not be transmitted to the bus depending on a temperature change.	

Cyclical transmission of temperature	0...**15**...255
This parameter specifies whether and at what time in minutes the determined wired sensor temperature is to be cyclically output via the "Wired sensor" object. If the setting is "0", the current wired sensor temperature will not be transmitted cyclically to the bus.	

Calibration	-12.8...**0**...12.7
Determines the value in Kelvin by which the sensor's measured value is adjusted.	

14.6.2 Object list

The name of the following objects can be specified by the parameter "Name of the room temperature measurement".

Function	Name	Type	DPT	Flag
Actual-temperature	Room temperature - output	2-byte	9,001	C, R, -, T, A
2-byte object for outputting the actual temperature (room temperature) determined by the push-button sensor. Possible value range: -99.9 °C to +99.9 °C / Measuring range of internal temperature sensor: -40 °C to +125 °C. The temperature value is output always in "°C" format.				

Function	Name	Type	DPT	Flag
External sensor	Room temperature - Input	2-byte	9,001	C, -, W, -, U
2-byte object for coupling an external KNX room temperature sensor or a controller extension. Thus cascading of several temperature sensors to measure the room temperature. Possible range of values: -99.9 °C to +99.9 °C. The temperature value must be specified always in "°C" format.				

The name of the following object can be specified by the parameter "Name of the further temperature measurement".

Function	Name	Type	DPT	Flag
Wired sensor	Further temperature measurement - output	2-byte	9,001	C, R, -, T, A
2-byte object for outputting the temperature determined by the wired sensor. Possible range of values: -99.9 °C to +99.9 °C. The temperature value is output always in "°C" format.				

14.7 Room humidity measurement

The push-button sensor possesses an integrated humidity sensor that can be used to detect the room humidity.

Room humidity measurement is activated on the "General" parameter page and configured on the "Room humidity measurement" parameter page.

Transmission of room humidity

The determined room humidity can be transmitted to the bus via the "Actual humidity" 2-byte object.

The parameter "Transmission after room humidity change by" in the parameter node "Room humidity measurement" defines the humidity value by which the humidity measurement actual value has to change for the actual value to be transmitted automatically via the "Actual humidity" object. Humidity value changes between 0% and 25% are possible. Setting to "0" at this point will deactivate the automatic transmission of the room humidity.

In addition, the determined room humidity can be transmitted cyclically. The "Cyclical transmission of room humidity" parameter determines the cycle time (1 to 255 minutes). The value "0" will deactivate the cyclical transmission of the actual value.
Setting the "Read" flag on the "actual humidity" object makes it possible to read out the current actual value at any time over the bus. It has to be pointed out that with deactivated cyclical transmission and deactivated automatic transmission, no more humidity telegrams will be transmitted in case of changes!

14.7.1 Table of parameters

"General" parameter page

Room humidity measurement	Activated **Deactivated**
This parameter activates the room humidity measurement. Additional parameters and objects become visible.	

"Room humidity measurement" parameter page

Name of the room humidity measurement	Room humidity measurement Max. 40 characters long text
This parameter gives the room humidity measurement a name for identification. The name serves merely as an aid in the ETS and is not programmed into the device.	

Transmission after room humidity change by	0...**2**...25
Determines the size of the value change of the room humidity as a percentage value after which the current value is automatically transmitted to the bus via the "Measured value" object. If set to "0", the actual value will not be transmitted to the bus depending on a room humidity change.	

Cyclical transmission of room humidity	0...**15**...255
This parameter specifies whether and at what time in minutes the determined room humidity is to be cyclically output via the "Measured value" object. If the setting is "0", the current room humidity will not be transmitted cyclically to the bus.	

14.7.2 Object list

The name of the following object can be specified by the parameter "Name of the room humidity measurement".

Function	Name	Type	DPT	Flag
Actual humidity	Room humidity measurement - output	2-byte	9,007	C, R, -, T, A
2-byte object for outputting the room humidity determined by the push-button sensor as a percentage value. The "Actual humidity" measured value is output without decimal places.				

14.8 Air quality

The push-button sensor offers three options for determining the air quality.

The integrated sensor can be used to measure volatile organic compounds (TVOC) and create an air quality index (IAQ) and determine the CO_2 content (eCO_2).

- VOC = Volatile Organic Compounds, in German: Flüchtige organische Verbindungen
- TVOC = Total Volatile Organic Compounds, in German: Gesamtgehalt flüchtiger organischer Verbindungen
- IAQ = Indoor Air Quality, in German: Innenraumluftqualität
- eCO_2 = Equivalent Carbon Dioxide, in German: Äquivalente CO_2-Konzentration

These measurements are typically used:

- in monitoring indoor air quality to ensure compliance with typical Federal Environment Agency (UBA) standards
- for monitoring indoor air quality in offices and living areas

These measurements can be used to carry out automation based on indoor air quality. For example, air purifiers, window openings or ventilation systems can be switched based on the air quality.

VOC measurement

The device measures the total volatile organic compounds in the air when VOC measurement is activated. The total volatile organic compounds are displayed on the bus as a TVOC value in µg/m³.

The TVOC value describes the total concentration of all measured VOCs in the air. VOCs are volatile organic compounds, chemicals that evaporate easily and are released into the air. A high TVOC value negatively affects the quality of indoor air and can be harmful to health. It can cause health problems such as headaches, fatigue or irritation of the eyes, nose or skin.

i Possible indoor sources are products and materials used in the construction of buildings and for interior decoration (e.g. floor, wall and ceiling materials, paints, varnishes, adhesives, furniture and decorative materials). Care, cleaning and hobby products, tobacco smoking, even food preparation and the human metabolism are also significant.

The following guide values are recommended for indoor areas.

TVOC (µg/m³)	Indoor air quality
500 to 800	Good
2500 to 3000	Medium
5000 to 6000	Moderate
9000 to 10000	Low

VOC (IAQ) measurement

The device measures the indoor air quality in relative values when VOC (IAQ) measurement is activated.

The IAQ value stands for "Indoor Air Quality". This is not a single chemical parameter as with VOCs, but a composite assessment of the air quality in an indoor space.

The IAQ value is an index or key figure that uses various measured parameters to assess how "good" or "bad" the air quality in a room is. The following factors, among others, can be included in the calculation:

- VOC content
- Temperature
- Air humidity

The device outputs the IAQ value to the bus as a numerical value. The higher the value, the worse the air quality.

The IAQ value is a practical overall indicator for assessing indoor air quality. The IAQ value helps to recognise whether room ventilation is necessary, for example.

The following table shows typical IAQ values and their evaluation

IAQ value	Indoor air quality
1.5 to 1.9	Good
2.9 to 3.3	Medium
3.9 to 4.3	Moderate
4.5 to 5	Low

eCO_2 measurement

The eCO_2 value stands for "equivalent carbon dioxide" - i. e. "equivalent CO_2 concentration".

The device uses a correlation algorithm between TVOC values and CO_2 values.

This makes it possible to establish a reliable link between the TVOC values and situations in which the CO_2 concentration increases due to human presence.

The range in which CO_2 is measured starts at 400 ppm (the normal value in the air) and goes up to 5000 ppm.

The following table shows typical eCO_2 values and their evaluation

eCO_2 value (ppm)	Indoor air quality
400 to 440	Good
420 to 460	Medium
580 to 620	Moderate
950 to 1050	Low

The air quality measurements are activated on the "General -> Basic settings" parameter page and configured on the "VOC measurement", "VOC (IAQ) measurement" and "eCO_2 measurement" parameter pages.

14.8.1 Table of parameters

"General -> Basic settings" parameter page

Air quality	Activated **Deactivated**
This parameter enables the parameters for the measurements to determine the air quality. The parameters "VOC measurement", "VOC (IAQ) measurement" and "eCO2 measurement" define which measurement is actually used for the determination.	

VOC measurement	**Activated** Deactivated
This parameter enables the measurements for determining the air quality feature VOC concentration. Additional parameters and objects become visible.	

VOC (IAQ) measurement	Activated **Deactivated**
This parameter enables the measurements for determining the air quality characteristic VOC (IAQ) concentration. Additional parameters and objects become visible.	

eCO2 measurement	Activated **Deactivated**
This parameter enables the measurements for determining the air quality feature eCO2 concentration. Additional parameters and objects become visible.	

14.8.2 VOC measurement

The determined VOC concentration can be sent to the bus via the 2-byte object "VOC concentration - actual value - status".

Sending the VOC concentration

The VOC concentration can be sent to the bus on change, cyclically or on change by cyclically.

In the event of a change, the VOC concentration is sent to the bus if the VOC concentration changes by a parametrizable value of 100 to 1000 in µg/m³.

The device can send the VOC concentration to the bus every 3 seconds to every 24 hours in a freely parametrizable cycle.

Transmission behaviour of alarms

The device can send up to four alarms to the bus for the measurement to determine the air quality VOC.

An alarm is sent to the bus via a 1-bit communication object

Each alarm message must be activated separately on the parameter page of the measurement.

Alarm 1	Good indoor air quality
Alarm 2	Average indoor air quality
Alarm 3	Moderate indoor air quality
Alarm 4	Low indoor air quality

Each alarm must be configured separately in the parameters in the ETS. Lower and upper threshold values can be parameterised with the desired behaviour.

The alarm can be triggered directly or after a parameterised transmission delay.

Sending the alarm

An alarm can be sent to the bus on change, cyclically or on change by cyclically.

The alarm is sent to the bus when the status of the alarm message changes.

The device can send the alarm to the bus every 1 minute to every 24 hours in a freely parametrizable cycle.

14.8.2.1 Table of parameters

Parameter page "Air quality -> VOC measurement"

Designation of the measurement	Max. 40 characters long text
This parameter gives the VOC measurement a name for identification. The name serves merely as an aid in the ETS and is not programmed into the device.	

Send VOC concentration	On change Cyclical On change and cyclical
Here you can set whether the VOC concentration is sent to the bus when there is a change by a parameterised value or cyclically. The VOC concentration can also be sent when there is a change and cyclically.	

On change by	**100**...1000 µg/m³
Determines the size of the change in the value of the VOC concentration, after which the current value is automatically sent to the bus via the "VOC concentration - actual value - status" object.	

Cycle time	0...24 h | 0...**15**...59 min | 0...59 s
This parameter defines whether and at what time the determined VOC concentration is to be output cyclically via the "VOC concentration - actual value - status" object.	

Transmission behaviour VOC alarms

The following parameters are available four times for a total of up to four alarm messages via four communication objects via the bus.

The parameter designations, parameter values and parameter functions are described once below.

Alarm ...	Activated **Deactivated**
This parameter enables a communication object for the transmission behaviour of the first alarm.	

Name ...	Max. 40 characters long text
This parameter gives the first alarm a name for identification. The name serves merely as an aid in the ETS and is not programmed into the device.	

Lower threshold value	100...**500**...10000 µg/m³
This parameter defines the lower threshold value separately for each alarm. The following default values are preset for alarms 1 to 4: – Alarm 1 = 500 µg/m³ – Alarm 2= 2500 µg/m³ – Alarm 3 = 5000 µg/m³ – Alarm 4 = 9000 µg/m³	

Upper threshold value	100...**800**...10000 µg/m³
This parameter defines the upper threshold value separately for each alarm. The following default values are preset for alarms 1 to 4: – Alarm 1 = 800 µg/m³ – Alarm 2= 3000 µg/m³ – Alarm 3 = 6000 µg/m³ – Alarm 4 = 10000 µg/m³	

Transmission delay	0...**1**...59 min | 0...59 s
This parameter defines the transmission delay separately for each alarm. With the "0" setting, values are sent to the bus without delay.	

Behaviour when exceeding the upper threshold value	**Off** On No reaction
This parameter defines the behaviour when the upper threshold value is exceeded separately for each alarm.	

Behaviour when falling below the lower threshold value	Off **On** No reaction
This parameter defines the behaviour when the value falls below the lower threshold separately for each alarm.	

Send alarm *n*	On change Cyclical On change and cyclical
Here you can set separately for each alarm whether the alarm is sent to the bus every time there is a change or cyclically. The VOC concentration can also be sent when there is a change and cyclically.	

Cycle time	0...24 h | 0...**10**...59 min
This parameter defines separately for each alarm the time at which the alarm is to be issued cyclically via the "VOC - Alarm *n*" object.	

14.8.2.2 Object list

The name of the following object can be specified using the "Name of measurement" parameter on the "VOC measurement" parameter page.

Function	Name	Type	DPT	Flag
VOC concentration - actual value - status	VOC (...) - output	2-byte	9,030	C, R, -, T, A
2-byte object for outputting the VOC concentration determined by the push-button sensor in µg/m³.				

Function	Name	Type	DPT	Flag
VOC - Alarm 1	VOC (good indoor air quality) - output	1-bit	1,005	C, R, -, T, A
1-bit object to output the first alarm.				

Function	Name	Type	DPT	Flag
VOC - Alarm 2	VOC (average indoor air quality) - output	1-bit	1,005	C, R, -, T, A
1-bit object to output the second alarm.				

Function	Name	Type	DPT	Flag
VOC - Alarm 3	VOC (Moderate indoor air quality) - Output	1-bit	1,005	C, R, -, T, A
1-bit object to output the third alarm.				

Function	Name	Type	DPT	Flag
VOC - Alarm 4	VOC (low indoor air quality) - output	1-bit	1,005	C, R, -, T, A
1-bit object to output the fourth alarm.				

14.8.2.3 VOC - Air quality indication

For the VOC measurement, the air quality indication can be assigned as a function of one or more status LEDs of the respective rockers or buttons.

The assignment is made via the function of a status LED "Air quality indication" using the "Function" parameter on the "Status LED - Function" parameter page Basic functions.

The status LED indicates the air quality in the colours green (good), yellow (medium) and red (poor).

The limit values are parameterised on the "Air quality -> VOC measurement -> VOC - Air quality indication" parameter page.

i The colour of the status LED, which is configured on the "General -> Basic settings" parameter page, is not taken into account when the "Air quality indication" function is executed.

Quality areas

The VOC - Air quality indication function can display the overall air quality in a range from 0 to 10000 µg/m³.

Three quality areas can be defined in the ETS for

- Good air quality -> Status LED lights up in the colour green
- Medium good air quality -> Status LED lights up in the colour yellow
- Poor air quality -> Status LED lights up in the colour red

In addition to the quality ranges, a hysteresis can be defined in the ETS, whereby a change in the quality range is reported to the status LED with a delay in order to delay a change in the light colour of the status LED. This avoids frequent changes of light colour.

i The ETS displays a static infographic for the default settings of the quality areas. This graphic does not adapt dynamically to parameterisations.

14.8.2.3.1 Table of parameters

Parameter page "Air quality -> VOC measurement -> VOC - Air quality indication"

Quality areas

The lower and upper range limits for indicating the air quality via the status LED are parameterised in the Quality ranges table.

The device offers three quality ranges. The entire range is predefined from 0 to 10000 µg/m³. This means that the lower range limit for the "Good air quality" quality range and the upper range limit for the "Poor air quality" quality range are fixed.

The upper range limit for the "Good air quality" quality range and the lower range limit for the "Poor air quality" quality range are parameterised in the ETS.

The range limits for the "Average air quality" quality range are automatically determined by the parameterisation of the "Good air quality" and "Poor air quality" ranges and are entered by the ETS.

i Ensure that the area boundaries do not overlap.

Good air quality (LED colour green)	**0** to 100...**1000**...5000 µg/m³
This parameter defines the quality range for the indication of good air quality with the LED colour green. The quality range always starts at 0.	

Average air quality (LED colour yellow)	100...**1000**...5000 to 2000...**4000**...9900 µg/m³
This parameter defines the quality range for the indication of medium air quality with the LED colour yellow. The quality range is automatically determined by the parameterisation of the "Good air quality" and "Poor air quality" ranges.	

Poor air quality (LED colour red)	2000....**4000**...9900 to **10000** µg/m³
This parameter defines the quality range for the indication of poor air quality with the LED colour red. The quality range always ends at 10000.	

Hysteresis	100...1000 µg/m³
This parameter defines the hysteresis, whereby a change in the quality range is signalled to the status LED with a delay in order to delay a change in the light colour of the status LED. This avoids frequent changes of light colour.	

14.8.3 VOC (IAQ) measurement

The determined VOC (IAQ) concentration can be sent to the bus via the 2-byte object "VOC (IAQ) concentration - actual value - status".

Sending the VOC (IAQ) concentration

The VOC (IAQ) concentration can be sent to the bus on change, cyclically or on change by cyclically.

On change, the VOC (IAQ) concentration is sent to the bus if the VOC (IAQ) concentration changes by a parametrizable value of 0.1 to 1.0.

The device can send the VOC (IAQ) concentration to the bus every 3 seconds to every 24 hours in a freely parametrizable cycle.

Transmission behaviour of alarms

The device can send up to four alarms to the bus for the measurement to determine the air quality VOC (IAQ).

An alarm is sent to the bus via a 1-bit communication object

Each alarm message must be activated separately on the parameter page of the measurement.

Alarm 1	Good indoor air quality
Alarm 2	Average indoor air quality
Alarm 3	Moderate indoor air quality
Alarm 4	Low indoor air quality

Each alarm must be configured separately in the parameters in the ETS. Lower and upper threshold values can be parameterised with the desired behaviour.

The alarm can be triggered directly or after a parameterised transmission delay.

Sending the alarm

An alarm can be sent to the bus on change, cyclically or on change by cyclically.

The alarm is sent to the bus when the status of the alarm message changes.

The device can send the alarm to the bus every 1 minute to every 24 hours in a freely parametrizable cycle.

14.8.3.1 Table of parameters

Parameter page "Air quality -> VOC (IAQ) measurement"

Designation of the measurement	Max. 40 characters long text
This parameter gives the VOC (IAQ) measurement a name for identification. The name serves merely as an aid in the ETS and is not programmed into the device.	

Transmission behaviour VOC concentration

Send VOC (IAQ) concentration	On change Cyclical On change and cyclical
Here you can set whether the VOC (IAQ) concentration is sent to the bus when it changes by a parameterised value or cyclically. The VOC (IAQ) concentration can also be sent when there is a change and cyclically.	

On change by	0.1...**0.5**...1
Determines the size of the change in the value of the VOC (IAQ) concentration, after which the current value is automatically sent to the bus via the "VOC (IAQ) concentration - actual value - status" object.	

Cycle time	0...24 h | 0...**15**...59 min | 0...59 s
This parameter defines whether and at what time the determined VOC (IAQ) concentration is to be output cyclically via the "VOC (IAQ) concentration - actual value - status" object.	

Transmission behaviour VOC (IAQ) alarms

The following parameters are available four times for a total of up to four alarm messages via four communication objects via the bus.

The parameter designations, parameter values and parameter functions are described once below.

Alarm ...	Activated **Deactivated**
This parameter enables a communication object for the transmission behaviour of the first alarm.	

Name ...	Max. 40 characters long text
This parameter gives the first alarm a name for identification. The name serves merely as an aid in the ETS and is not programmed into the device.	

Lower threshold value	1...**1.5**...5
This parameter defines the lower threshold value separately for each alarm. The following default values are preset for alarms 1 to 4: – Alarm 1 = 1.5 – Alarm 2= 2.9 – Alarm 3 = 3.9 – Alarm 4 = 4.5	

Upper threshold value	1...**1.9**...5
This parameter defines the upper threshold value separately for each alarm. The following default values are preset for alarms 1 to 4: – Alarm 1 = 1.9 – Alarm 2= 3.3 – Alarm 3 = 4.3 – Alarm 4 = 5	

Transmission delay	0...**1**...59 min | 0...59 s
This parameter defines the transmission delay separately for each alarm. With the "0" setting, values are sent to the bus without delay.	

Behaviour when exceeding the upper threshold value	**Off** On No reaction
This parameter defines the behaviour when the upper threshold value is exceeded separately for each alarm.	

Behaviour when falling below the lower threshold value	Off **On** No reaction
This parameter defines the behaviour when the value falls below the lower threshold separately for each alarm.	

Send alarm *n*	On change Cyclical On change and cyclical
Here you can set separately for each alarm whether the alarm is sent to the bus every time there is a change or cyclically. The VOC (IAQ) concentration can also be sent when there is a change and cyclically.	

Cycle time	0...24 h | 0...**10**...59 min
This parameter defines separately for each alarm the time at which the alarm is to be issued cyclically via the "VOC (IAQ) - Alarm *n*" object.	

14.8.3.2 Object list

The name of the following object can be specified using the "Name of measurement" parameter on the "VOC (IAQ) measurement" parameter page.

Function	Name	Type	DPT	Flag
VOC (IAQ) concentration - actual value - status	VOC (IAQ) (...) - Output	2-byte	---	C, R, -, T, A
2-byte object for outputting the VOC (IAQ) concentration determined by the pushbutton sensor without a unit.				

Function	Name	Type	DPT	Flag
VOC (IAQ) - Alarm 1	VOC (IAQ) (Good Indoor Air Quality) - Output	1-bit	1,005	C, R, -, T, A
1-bit object to output the first alarm.				

Function	Name	Type	DPT	Flag
VOC (IAQ) - Alarm 2	VOC (IAQ) (Average Indoor Air Quality) - Output	1-bit	1,005	C, R, -, T, A
1-bit object to output the second alarm.				

Function	Name	Type	DPT	Flag
VOC (IAQ) - Alarm 3	VOC (IAQ) (Moderate Indoor Air Quality) - Output	1-bit	1,005	C, R, -, T, A
1-bit object to output the third alarm.				

Function	Name	Type	DPT	Flag
VOC (IAQ) - Alarm 4	VOC (IAQ) (Low Indoor Air Quality) - Output	1-bit	1,005	C, R, -, T, A
1-bit object to output the fourth alarm.				

14.8.4 eCO2 measurement

The determined eCO2 concentration can be sent to the bus via the 2-byte object "eCO2 concentration - actual value - status".

Sending the eCO2 concentration

The eCO2 concentration can be sent to the bus on change, cyclically or on change by cyclically.

If there is a change, the eCO2 concentration is sent to the bus if the eCO2 concentration changes by a parametrizable value of 10 to 500 in ppm.

The device can send the eCO2 concentration to the bus every 3 seconds to every 24 hours in a freely parametrizable cycle.

Transmission behaviour of alarms

The device can send up to four alarms to the bus for the measurement to determine the air quality eCO2.

An alarm is sent to the bus via a 1-bit communication object

Each alarm message must be activated separately on the parameter page of the measurement.

Alarm 1	Good indoor air quality
Alarm 2	Average indoor air quality
Alarm 3	Moderate indoor air quality
Alarm 4	Low indoor air quality

Each alarm must be configured separately in the parameters in the ETS. Lower and upper threshold values can be parameterised with the desired behaviour.

The alarm can be triggered directly or after a parameterised transmission delay.

Sending the alarm

An alarm can be sent to the bus on change, cyclically or on change by cyclically.

The alarm is sent to the bus when the status of the alarm message changes.

The device can send the alarm to the bus every 1 minute to every 24 hours in a freely parametrizable cycle.

14.8.4.1 Table of parameters

Parameter page "Air quality -> eCO2 measurement"

Designation of the measurement	Max. 40 characters long text
This parameter gives the eCO2 measurement a name for identification. The name serves merely as an aid in the ETS and is not programmed into the device.	

Transmission behaviour eCO2 concentration

send eCO2 concentration	On change Cyclical On change and cyclical
Here you can set whether the eCO2 concentration is sent to the bus when there is a change by a parameterised value or cyclically. The eCO2 concentration can also be sent when there is a change and cyclically.	

On change by	10...**50**...500 ppm
Determines the size of the change in the value of the eCO2 concentration, after which the current value is automatically sent to the bus via the "eCO2 concentration - actual value - status" object.	

Cycle time	0...24 h | 0...**15**...59 min | 0...59 s
This parameter defines whether and at what time the determined eCO2 concentration is to be output cyclically via the "eCO2 concentration - actual value - status" object.	

Transmission behaviour eCO2 alarms

The following parameters are available four times for a total of up to four alarm messages via four communication objects via the bus.

The parameter designations, parameter values and parameter functions are described once below.

Alarm ...	Activated **Deactivated**
This parameter enables a communication object for the transmission behaviour of the first alarm.	

Name ...	Max. 40 characters long text
This parameter gives the first alarm a name for identification. The name serves merely as an aid in the ETS and is not programmed into the device.	

Lower threshold value	420...**420**...3000 ppm
This parameter defines the lower threshold value separately for each alarm. The following default values are preset for alarms 1 to 4: – Alarm 1 = 420 ppm – Alarm 2= 420 ppm – Alarm 3 = 580 ppm – Alarm 4 = 950 ppm	

Upper threshold value	420...**440**...3000 ppm
This parameter defines the upper threshold value separately for each alarm. The following default values are preset for alarms 1 to 4: – Alarm 1 = 440 ppm – Alarm 2= 440 ppm – Alarm 3 = 620 ppm – Alarm 4 = 1050 ppm	

Transmission delay	0...**1**...59 min | 0...59 s
This parameter defines the transmission delay separately for each alarm. With the "0" setting, values are sent to the bus without delay.	

Behaviour when exceeding the upper threshold value	**Off** On No reaction
This parameter defines the behaviour when the upper threshold value is exceeded separately for each alarm.	

Behaviour when falling below the lower threshold value	Off **On** No reaction
This parameter defines the behaviour when the value falls below the lower threshold separately for each alarm.	

Send alarm *n*	On change Cyclical On change and cyclical
Here you can set separately for each alarm whether the alarm is sent to the bus every time there is a change or cyclically. The eCO2 concentration can also be sent when there is a change and cyclically.	

Cycle time	0...24 h | 0...**10**...59 min
This parameter defines separately for each alarm the time at which the alarm is to be issued cyclically via the "eCO2 - Alarm *n*" object.	

14.8.4.2 Object list

The name of the following object can be specified using the "Name of measurement" parameter on the "eCO2 measurement" parameter page.

Function	Name	Type	DPT	Flag
eCO2 concentration - actual value - status	eCO2 (...) - output	2-byte	9,008	C, R, -, T, A
2-byte object for outputting the eCO2 concentration determined by the push-button sensor in ppm.				

Function	Name	Type	DPT	Flag
eCO2 - Alarm 1	eCO2 (Good indoor air quality) - Output	1-bit	1,005	C, R, -, T, A
1-bit object to output the first alarm.				

Function	Name	Type	DPT	Flag
eCO2 - Alarm 2	eCO2 (Average indoor air quality) - Output	1-bit	1,005	C, R, -, T, A
1-bit object to output the second alarm.				

Function	Name	Type	DPT	Flag
eCO2 - Alarm 3	eCO2 (Moderate indoor air quality) - Output	1-bit	1,005	C, R, -, T, A
1-bit object to output the third alarm.				

Function	Name	Type	DPT	Flag
eCO2 - Alarm 4	eCO2 (low indoor air quality) - output	1-bit	1,005	C, R, -, T, A
1-bit object to output the fourth alarm.				

14.9 Transmission delay

The transmission delay is determined by the push-button sensor from the device number of its physical address (phys. address: area.line.device number). The higher the device number of the push-button sensor, the longer its transmission delay. The transmission delay can be up to 30 seconds maximum (device number = 255).

The transmission delay is permanently activated in the push-button sensor. The transmission delay reduces the load on the bus by preventing multiple push-button sensors used in a project from simultaneously attempting to transmit telegrams to the bus. The transmission delay exclusively applies to the 'Read on init' function. 'Read on init' enforces updating of the communication object value using a read request when the device is switched on. Communication objects will perform 'Read on init' if the I flag and the T flag are activated.

After a programming operation (phys. address or application program) or after bus voltage has been activated, the push-button sensor will then attempt to query current values (e.g. operating mode, presence function, setpoint shift) using the corresponding communication objects via the bus, for example from a room temperature controller. The push-button sensor updates its object statuses in this way.

i By default, no I flags are activated in the push-button sensor parameterisation.

i The transmit delay is not active for the rocker and button functions of the push-button sensor.

Gira
Giersiepen GmbH & Co. KG
Elektro-Installations-
Systeme

Industriegebiet Mermbach
Dahlienstraße
42477 Radevormwald

Postfach 12 20
42461 Radevormwald

Deutschland

Tel +49(0)21 95 - 602-0
Fax +49(0)21 95 - 602-191

www.gira.de
info@gira.de